Preserve your food and your style

Quality, Design and Innovation

LIEBHERR

Global Success: The Liebherr Group

Liebherr is a third-generation, family-owned company founded by Hans Liebherr in 1949 with the creation of the first ever tower crane.

With 70 years of success, Liebherr has become synonymous with the equipment needed to build homes and businesses, as well as the appliances within them. One of the world's largest manufacturers of construction machinery, Liebherr has expanded to eleven divisions with a wide array of product ranges, including earthmoving, mining, mobile cranes, tower cranes, concrete technology, maritime cranes, aerospace and transportation systems, gear technology and automation systems, components, hotels and domestic appliances.

The company currently employs over 46,000 persons in more than 130 companies in over 50 countries worldwide. Liebherr Appliances is Europe's largest privately owned manufacturer of fridges and freezers for residential and commercial use, with an annual production of more than 2.1 million units.

Earthmoving

Mining

Mobile Cranes

Tower Cranes

Concrete Technology

Maritime Cranes

Aerospace and Transportation Systems

Gear Technology and Automation Systems

Domestic Appliances

Components

Hotels

Liebherr Appliances in North America

Liebherr in Miami, Florida, USA

Headquartered in Germany, Liebherr Appliances manufactures the widest range of European refrigeration and freezing products throughout the world. Liebherr´s first steps into the Americas was in the early 1970´s, later expanding Liebherr Appliances into North America in 2004.

Liebherr Appliances in North America is located in Miami, Florida in the United States, and Burlington, Ontario, in Canada.

Liebherr in Burlington, Ontario, Canada

Liebherr Parts and Service for USA and Canada

Customer Service Number for USA:
+1 (866) LIEBHERR (543-2437)

Customer Service Number for Canada:
+1 (888) LIEBHERR (543-2437)

Email address: service-appliance.us@liebherr.com
Visit our website: home.liebherr.com

Liebherr Warranty Plan

2 YEAR Warranty

Full Two-Year Warranty

For two (2) years from the date of original purchase, your Liebherr warranty covers all parts and labor to repair or replace any part of the product which proves to be defective in materials or workmanship.

5 YEAR Warranty

Full Five-Year Warranty

For five (5) years from the date of original purchase, your Liebherr warranty covers all parts and labor to repair or replace any components that prove to be defective in materials or workmanship in the Sealed System. The Sealed System refers to only the compressor, condenser, evaporator, drier and connecting tubing.

12 YEAR Warranty

Limited 6–12 Year Warranty

From the sixth (6th) through the twelfth (12th) year from the date of original purchase, your Liebherr warranty covers all parts that prove to be defective in materials or workmanship in the Sealed System (parts only).

Why Liebherr

German Quality & Heritage

Liebherr is a world leader in developing premium quality cooling and refrigeration technologies. Our German engineered products are acclaimed for advanced food preservation, design flexibility, maximum energy efficiency and ease of use. Headquartered in Germany since 1954, Liebherr Appliances distributes the widest range of European refrigeration and freezing solutions around the globe. Liebherr continues to research and develop products that match or exceed not only the standards we set for ourselves, but also the quality our loyal customers have come to expect.

GERMAN ENGINEERING

Silent Operation

Liebherr appliances are some of the quietest in the industry – as quiet as a library. Variable speed compressors are always operating at optimal capacity, ensuring maximum food preservation with quiet operation. Combined with soft-start technology, these compressors offer quiet operation and minimal electrical surge at start-up. Every new product is tested in our professional sound chambers to ensure that noise levels are kept to a minimum.

Advanced Food Preservation

Foods preserved in ideal storage temperatures and perfect air humidity will preserve their vitamins, nutrients, flavors, and aromas for far longer, which is the key to achieving a healthy lifestyle. Liebherr's advanced food preservation technologies guarantee the perfect environments for all kinds of foods. BioFresh, SuperCool, SuperFrost and DuoCooling are just a few examples of performance enhancing features that contribute to superior, long-lasting food freshness.

ActiveGreen Initiative

Energy efficiency is at the heart of our ActiveGreen commitment, and it is reflected in every aspect of our design and manufacturing process. An industry trailblazer in green manufacturing, Liebherr utilizes progressive practices such as recovering and reutilizing energy to heat buildings, using 100% recyclable packaging, and using purified water to ensure that production is pollution free, all with the goal of having the least damaging effect on the environment.

Better Use of Space

Our innovative food storage features allow for the optimal storing of products, for quick and easy access to your favorite foods while reducing food waste. Divisible glass shelves, interchangeable glass and bottle shelves, FlexSystem, VarioSpace, and gallon storage on the door are just some of the ways in which Liebherr refrigerators fit more cubic feet of your everyday life.

Diverse Design Options

Liebherr appliances are designed to inspire awe and integrate seamlessly into your kitchen motif. Multiple size configurations, installation options, and choice of stainless steel or personalized finishes allow for perfect integration into your dream kitchen. From refrigerators, to wine cabinets, to outdoor appliances, Liebherr Appliances offer a diverse range refrigeration and freezing solutions for your home.

Bio Fresh

Experience Super Freshness with BioFresh

Keeping your food fresh in a Liebherr is easy. BioFresh guarantees the perfect climate for super-long-term freshness. Through its advanced technology the temperature is kept at just above freezing.

Each drawer can be used individually and provides ideal humidity. The **DrySafe** drawer with low humidity is ideal for storing meat, fish and dairy products, while fruits and vegetables are best kept in the high humidity **HydroSafe** or **Fruit & Vegetable-Safe** (optional). The natural loss of moisture in fruit and vegetables is significantly reduced. It's simple: fresh is better.

Freshness Perfected with BioFresh

Liebherr's BioFresh technology contributes to a healthy diet and wellbeing in addition to offering convenience that fits with your busy lifestyle. Nature offers a whole range of essential nutrients vitamins, minerals and carbohydrates to give us energy. However, the right temperature and ideal humidity conditions are essential if food is to retain its healthy properties and delicate flavours as long as possible.

Liebherr's BioFresh technology provides perfect freshness for all types of food and delivers impressive long lasting preservation as well as day-to-day convenience.

The Liebherr BioFresh App

biofresh.liebherr.com

It provides the ultimate tool for all health conscious food lovers to easily access valuable information regarding food storage, vitamins, minerals and shelf life.

The information relates to storage in a BioFresh drawer compared to a conventional fridge.

HCB 2081

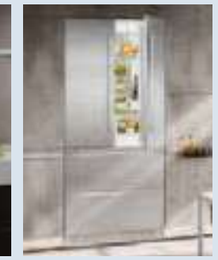

	Freestanding / Semi Built-in	Fully Integrated	Undercounter	Wine Cabinets	Design & Lifestyle
17"					**WS 1200** p. 100
					XS 200 p. 102
24"	**CBS 1360** p. 16/40	**HCB 1060** p. 46	**UPR 513** p. 66	**HW 8000** p. 80	
	CS 1321 p. 18/40	**HC 1050B** p. 48	**UR 500** p. 68	**HWgb 8300** p. 80	
	CS 1360B p. 20	**HC 1030** p. 48	**UB 501** p. 70	**HWgw 8300** p. 80	
	CS 1210 p. 22		**UF 501** p. 72	**HW 4800** p. 82	
			RU 510 p. 74	**HWgb 5100** p. 82	
			RO 510 p. 76	**HWgw 5100** p. 82	
				HW 3000 p. 84	
				HWgb 3300 p. 84	
				HWgw 3300 p. 84	
				HWgb 1803 p. 86	
				HWS 1800 p. 88	
				WUgb 3400 p. 90	
				WU 3400 p. 92	
				WU 4500 p. 94	
28"				**WS 17800** p. 96	
30"	**CBS 1660** p. 24/42	**HCB 1580** p. 50			
	CBS 1661 p. 24/42	**HCB 1581** p. 50			
	CS 1640B p. 26	**HC 1550** p. 52			
	CS 1410 p. 28	**HC 1551** p. 52			
	CS 1400R-IM p. 30	**HC 1540** p. 52			
	CS 1401R-IM p. 30	**HC 1541** p. 52			
	CS 1400R p. 32				
36"	**CBS 2082** p. 34	**HCB 2082** p. 54			
	CS 2082 p. 36	**HCB 2080** p. 56			
	CS 2081 p. 38	**HCB 2081** p. 56			
	CS 2080 p. 38	**HC 2082** p. 58			
		HC 2080 p. 60			
		HC 2081 p. 60			
48"	**CS 1321 & CBS 1360** p. 40	**HF 861 & HRB 1120** p. 62			
60"	**CBS 1661 & CBS 1660** p. 42				

CS 2082

Key Benefits – Freestanding/Semi Built-in Appliances

Smart Steel

SmartSteel: Available on select freestanding/semi built-in models, SmartSteel finish significantly reduces the visibility of fingerprints, is easy to clean, and is scratch resistant. Simply wipe with a dry or damp cloth to maintain this beautiful exterior.

Bio Fresh

BioFresh: BioFresh drawers provide a customizable interplay of temperature and humidity controls. The DrySafe drawer with low humidity is ideal for storing meat, fish, and dairy products, while fruits and vegetables are best kept in the high humidity HydroSafe.

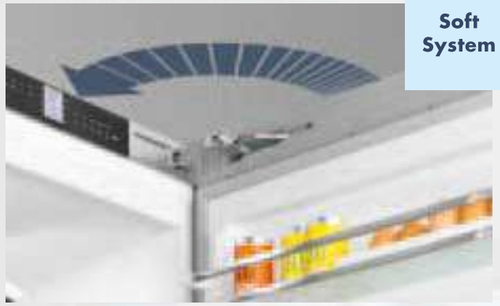

Soft System

SoftSystem: SoftSystem integrated into the appliance door cushions the door closure, eliminating slamming, even when shelves are with fully loaded. In freestanding appliances, the door will close automatically from an opening angle of approx. 45°.

Super Cool

Super Frost

SuperCool/SuperFrost: Simply quick chill and/or freeze just-bought groceries to preserve optimal freshness and seal in flavors, textures, and essential vitamins and minerals.

Vario Space

VarioSpace: VarioSpace is Liebherr's practical solution to accommodating bulky items. All freezers include drawers and glass shelves that can be conveniently removed to create extra storage space when needed.

Stainless steel back wall: The high-quality, stainless steel back wall is both eye-catching and highly functional. The stainless wall prevents foods from freezing up against the evaporator, ensuring that the back of the refrigerator is always drip and ice-free.

Features shown are model dependent. Product features may vary.

Freestanding/Semi Built-in

24"

The slim styling and urban design of the **CBS 1360** is the perfect appliance for small spaces, galley kitchens, or apartment living. This sleek 24" refrigerator-freezer includes unique features such as BioFresh technology, which helps foods retain their healthy vitamins, aromas, and appetizing appearance for significantly longer than in conventional refrigerators. The CBS 1360 also includes LED light columns inside the refrigerator which function as shelf support for the scratch resistant and easy-to-clean GlassLine shelves. Smart interior design features include a glass/bottle shelf, foldable glass shelf, gallon holders to maximize space, and a stainless steel back wall which prevents dripping and the build-up of ice. Liebherr's SmartSteel material on the door is scratch resistant and makes fingerprints virtually disappear.

Alternatively, the CBS 1360 can be flawlessly built into kitchen cabinetry to fit personalized designs that reflect your lifestyle. Liebherr offers an exterior water filter accessory for the CBS 1360 which can be placed into the cabinetry above or beside the appliance.

Possible Side-by-Side combination
CS 1321 and CBS 1360

CBS 1360 Premium

Bio Fresh | Duo Cooling | Ice Maker | Soft System | Soft Telescopic | Smart Steel

Energy consumption	
in 365 days kWh	480
Estimated Yearly Energy Cost in US $*	58
Capacity	
Total capacity cu.ft. (l)	12.0 (340)
Refrigerator comp. cu.ft. (l)	8.7 (246)
BioFresh comp. cu.ft. (l)	3.0 (85)
NoFrost Freezer comp. cu.ft. (l)	3.3 (94)
Net weight lbs. (kg)	213.8 (97.0)
Climate rating	SN-T
Sound rating dB(A)**	41
Ice cube output lbs. (kg) / 24 h	3.1 (1.4)
Ice cube stock lbs. (kg)	6.6 (3.0)
Door hinges	right, reversible
Product dimensions	
in inch H/W/D	79 9/16" / 23 5/8" / 24 13/16"
in cm H/W/D	202 / 60 / 63
Cut out dimensions	
in inch H/W/D	80" / 24 1/16" / 24 1/16"
in cm H/W/D	203.2 / 61 / 61
Energy supply	
Voltage V/Hz	115 / 60
Ventilation Requirements for installation per unit	200 cm² / 31 in²

Available accessories (from page 104)
1.1, 4.2, 4.3, 5.5, 7.4, 7.5, 7.12

* Estimated energy cost will depend on utility rates and use. Estimated energy cost based on a national average electricity cost of 12 cents per KWh.
** Noise level – sound power re 1pW – according to EN 60704-3.

24" Freestanding/Semi Built-in

The slim styling and urban design of the **CS 1321** left hinge refrigerator-freezer is the perfect appliance for small spaces, galley kitchens, or apartment living. While being one of the most energy efficient appliances in its class, this sleek 24" model includes unique features such as LED light columns inside the refrigerator which function as shelf support for the scratch resistant and easy-to-clean GlassLine shelves. Smart interior design features also include a foldable glass shelf, and a stainless steel back wall which prevents dripping and the build-up of ice. The exterior SmartSteel finish is scratch resistant, and makes fingerprints virtually disappear.

Alternatively, the CS 1321 can be flawlessly built into kitchen cabinetry to fit personalized designs that reflect your lifestyle. Doors close automatically and gently thanks to our SoftSystem technology, which eliminates slamming even when shelves are fully loaded.

Possible Side-by-Side combination
CS 1321 and CBS 1360

CS 1321 Premium

Duo Cooling | Soft System | Smart Steel

Energy consumption	
in 365 days kWh	380
Estimated Yearly Energy Cost in US $*	46
Capacity	
Total capacity cu.ft. (l)	12.7 (361)
Refrigerator comp. cu.ft. (l)	9.4 (267)
NoFrost Freezer comp. cu.ft. (l)	3.3 (94)
Net weight lbs. (kg)	200.6 (91.0)
Climate rating	SN-T
Sound rating dB(A)**	42
Door hinges	left, reversible
Product dimensions	
in inch H/W/D	79 9/16"/23 5/8"/24 13/16"
in cm H/W/D	202/60/63
Cut out dimensions	
in inch H/W/D	80"/24 1/16"/24 1/16"
in cm H/W/D	203.2/61/61
Energy supply	
Voltage V/Hz	115/60
Ventilation Requirements for installation per unit	200 cm²/31 in²

Available accessories (from page 104)
1.1, 5.5, 7.4, 7.5, 7.12

*Estimated energy cost will depend on utility rates and use. Estimated energy cost based on a national average electricity cost of 12 cents per KWh.
**Noise level – sound power re 1pW – according to EN 60704-3.

Freestanding/Semi Built-in

24"

The slim styling and urban design of the **CS 1360B** refrigerator-freezer is the perfect appliance for small spaces, galley kitchens, or apartment living. This sleek 24" model includes smart interior design features like a foldable glass shelf, and a stainless steel back wall which prevents dripping and the build-up of ice. Liebherr's SmartSteel material on the door is scratch resistant and makes fingerprints virtually disappear. The automatic IceMaker with fixed water connection produces perfect half-moon crescent ice cubes, keeping a constant supply on hand for every occasion.

Alternatively, the CS 1360B can be flawlessly built into kitchen cabinetry to fit personalized designs that reflect your lifestyle.

CS 1360B Comfort

Duo Cooling | Ice Maker | Smart Steel

Energy consumption	
in 365 days kWh	480
Estimated Yearly Energy Cost in US $*	58
Capacity	
Total capacity cu.ft. (l)	12.7 (361)
Refrigerator comp. cu.ft. (l)	9.4 (267)
NoFrost Freezer comp. cu.ft. (l)	3.3 (94)
Net weight lbs. (kg)	196.2 (89.0)
Climate rating	SN-T
Sound rating dB(A)**	42
Ice cube output lbs. (kg) / 24 h	3.1 (1.4)
Ice cube stock lbs. (kg)	6.6 (3.0)
Door hinges	right, reversible
Product dimensions	
in inch H/W/D	79 9/16" / 23 5/8" / 24 13/16"
in cm H/W/D	202 / 60 / 63
Cut out dimensions	
in inch H/W/D	80" / 24 1/16" / 24 1/16"
in cm H/W/D	203.2 / 61 / 61
Energy supply	
Voltage V/Hz	115 / 60
Ventilation Requirements for installation per unit	200 cm² / 31 in²

Available accessories (from page 104)

1.1, 4.2, 4.3, 5.5, 7.5

* Estimated energy cost will depend on utility rates and use. Estimated energy cost based on a national average electricity cost of 12 cents per KWh.

** Noise level – sound power re 1pW – according to EN 60704-3.

Freestanding/Semi Built-in

24"

The slim styling and urban design of the **CS 1210** make it the perfect appliance for small spaces, galley kitchens, and apartment living. This sleek, 24" refrigerator-freezer includes smart interior design features like an LED ceiling light, foldable glass shelf, and a stainless steel back wall which prevents dripping and the build-up of ice. The exterior SmartSteel finish is scratch resistant, and makes fingerprints virtually disappear.

Liebherr's DuoCooling system, with individual variable speed compressors, provides superior performance and efficiency, as well as advanced food preservation. The dual refrigeration system creates optimal conditions in both the refrigerator and freezer compartments, which lengthens the shelf life of foods for a healthier lifestyle. Individual silent cooling systems ensure accurate temperature and humidity controls so that your fresh foods never dry out.

CS 1210 Comfort

Duo Cooling | Smart Steel

Energy consumption	
in 365 days kWh	348
Estimated Yearly Energy Cost in US $*	42
Capacity	
Total capacity cu.ft. (l)	11.1 (314)
Refrigerator comp. cu.ft. (l)	7.8 (220)
NoFrost Freezer comp. cu.ft. (l)	3.3 (94)
Net weight lbs. (kg)	180.8 (82.0)
Climate rating	SN-T
Sound rating dB(A)**	42
Door hinges	right, reversible
Product dimensions	
in inch H/W/D	71 11/16"/23 5/8"/24 13/16"
in cm H/W/D	182/60/63
Cut out dimensions	
in inch H/W/D	73"/24 1/16"/24 1/16"
in cm H/W/D	185.4/61/61
Energy supply	
Voltage V/Hz	115/60
Ventilation Requirements for installation per unit	200 cm²/31 in²

Available accessories (from page 104)
1.1, 5.5, 7.5

* Estimated energy cost will depend on utility rates and use. Estimated energy cost based on a national average electricity cost of 12 cents per KWh.

** Noise level – sound power re 1pW – according to EN 60704-3.

Freestanding/Semi Built-in

30"

The **CBS 1660** is the perfect solution for when your kitchen calls for a 30" appliance. This refrigerator-freezer includes unique features such as BioFresh technology, which helps foods retain their healthy vitamins, aromas, and appetizing appearance for significantly longer than in conventional refrigerators. Energy efficient LED lighting takes a starring role by illuminating the main compartment, and unique integrated LED lights sit on the bottom of the refrigerator door to shine down into the freezer drawers when opened.

Features such as a foldable glass shelf, gallon holders to maximize space, and stainless steel back wall make the interior of the CBS 1660 as appealing as the beautiful exterior's ergonomic handles, beveled edges, and easy-to-clean SmartSteel finish.

Possible Side-by-Side combination
CBS 1661 and CBS 1660

CBS 1660 Premium

Bio Fresh | Duo Cooling | Ice Maker | Soft System | Soft Telescopic | Smart Steel

Energy consumption	
in 365 days kWh	488
Estimated Yearly Energy Cost in US $*	59
Capacity	
Total capacity cu.ft. (l)	15.0 (424)
Refrigerator comp. cu.ft. (l)	10.7 (303)
BioFresh comp. cu.ft. (l)	3.6 (103)
NoFrost Freezer comp. cu.ft. (l)	4.3 (121)
Net weight lbs. (kg)	255.7 (116.0)
Climate rating	SN-T
Sound rating dB(A)**	41
Ice cube output lbs. (kg) / 24 h	3.1 (1.4)
Ice cube stock lbs. (kg)	4.4 (2.0)
Door hinges	right, reversible
Product dimensions	
in inch H/W/D	79 9/16" / 29 9/16" / 24 13/16"
in cm H/W/D	202 / 75 / 63
Cut out dimensions	
in inch H/W/D	80" / 30" / 24 1/16"
in cm H/W/D	203.2 / 76.2 / 61
Energy supply	
Voltage V/Hz	115 / 60
This unit is also available as	
CBS 1661: with left door hinges	
Ventilation Requirements for installation per unit	200 cm² / 31 in²

Available accessories (from page 104)
1.1, 4.2, 4.3, 5.5, 7.4, 7.5

* Estimated energy cost will depend on utility rates and use. Estimated energy cost based on a national average electricity cost of 12 cents per KWh.
** Noise level – sound power re 1pW – according to EN 60704-3.

Freestanding/Semi Built-in

30"

The urban design of the **CS 1640B** is the perfect appliance for apartment living. While being one of the most energy efficient appliances in its class, the CS 1640B includes smart interior design features like a foldable glass shelf, electronic touch control panel, GlassLine shelving, and a stainless steel back wall which prevents dripping and the build-up of ice. The exterior SmartSteel finish is scratch resistant, and makes fingerprints virtually disappear.

Liebherr's DuoCooling system, with individual variable speed compressors, provides superior performance and efficiency, as well as advanced food preservation. The dual refrigeration system creates optimal conditions in both the refrigerator and freezer compartments, which lengthens the shelf life of foods for a healthier lifestyle. Individual silent cooling systems ensure accurate temperature and humidity controls so that your fresh foods never dry out.

Advantageously, this model eliminates the need for a water hook up as it includes a convenient 50 oz internal water tank for the IceMaker. Simply fill the tank with filtered water to produce perfect half-moon crescent ice cubes.

CS 1640B Comfort

Duo Cooling | Ice Maker | Soft System | Smart Steel

Energy consumption	
in 365 days kWh	496
Estimated Yearly Energy Cost in US $*	60
Capacity	
Total capacity cu.ft. (l)	16.0 (452)
Refrigerator comp. cu.ft. (l)	11.7 (331)
NoFrost Freezer comp. cu.ft. (l)	4.3 (121)
Net weight lbs. (kg)	238.1 (108.0)
Climate rating	SN-T
Sound rating dB(A)**	42
Ice cube output lbs. (kg) / 24 h	3.1 (1.4)
Ice cube stock lbs. (kg)	4.4 (2.0)
Door hinges	right, reversible
Product dimensions	
in inch H/W/D	79 9/16" / 29 9/16" / 24 13/16"
in cm H/W/D	202 / 75 / 63
Cut out dimensions	
in inch H/W/D	80" / 30" / 24 1/16"
in cm H/W/D	203.2 / 76.2 / 61
Energy supply	
Voltage V/Hz	115 / 60
Ventilation Requirements for installation per unit	200 cm² / 31 in²

Available accessories (from page 104)
1.1, 5.5, 7.4, 7.5

* Estimated energy cost will depend on utility rates and use. Estimated energy cost based on a national average electricity cost of 12 cents per KWh.

** Noise level – sound power re 1pW – according to EN 60704-3.

Freestanding/Semi Built-in

30"

The 30" **CS 1410** refrigerator-freezer is the perfect appliance for smaller footprint installations, like in galley kitchens or apartment living. While being one of the most energy efficient appliances in its class, the CS 1410 includes smart interior design features like a foldable glass shelf, and a stainless steel back wall which prevents dripping and the build-up of ice. Liebherr's SmartSteel material on the door is scratch resistant and makes fingerprints virtually disappear, while doors close automatically and gently thanks to our SoftSystem technology, which eliminates slamming even when shelves are fully loaded.

Liebherr's DuoCooling system, with individual variable speed compressors, provides superior performance and efficiency, as well as advanced food preservation. The dual refrigeration system creates optimal conditions in both the refrigerator and freezer compartments, which lengthens the shelf life of foods for a healthier lifestyle. Individual silent cooling systems ensure accurate temperature and humidity controls so that your fresh foods never dry out.

CS 1410 Comfort

Duo Cooling | Soft System | Smart Steel

Energy consumption	
in 365 days kWh	372
Estimated Yearly Energy Cost in US $*	42
Capacity	
Total capacity cu.ft. (l)	14.7 (417)
Refrigerator comp. cu.ft. (l)	11.7 (331)
NoFrost Freezer comp. cu.ft. (l)	3.0 (86)
Net weight lbs. (kg)	213.8 (97.0)
Climate rating	SN-T
Sound rating dB(A)**	42
Door hinges	right, reversible
Product dimensions	
in inch H/W/D	73 1/4"/29 9/16"/24 13/16"
in cm H/W/D	186/75/63
Cut out dimensions	
in inch H/W/D	73 13/16"/30"/24 1/16"
in cm H/W/D	187.4/76.2/61
Energy supply	
Voltage V/Hz	115/60
Ventilation Requirements for installation per unit	200 cm²/31 in²

Available accessories (from page 104)

1.1, 5.5, 7.5

* Estimated energy cost will depend on utility rates and use. Estimated energy cost based on a national average electricity cost of 12 cents per KWh.

** Noise level – sound power re 1pW – according to EN 60704-3.

Freestanding/Semi Built-in

30"

The 30" **CS 1400R-IM** refrigerator-freezer is the perfect appliance for installations of a smaller footprint with upper cabinets, while encompassing all of the great features and benefits of a Liebherr appliance. While being one of the most energy efficient appliances in its class, the CS 1400R-IM includes smart interior design features like a foldable glass shelf, and a stainless steel back wall which prevents dripping and the build-up of ice.

Liebherr's SmartSteel material on the door is scratch resistant and makes fingerprints virtually disappear, while doors close automatically and gently thanks to our SoftSystem technology, which eliminates slamming even when shelves are fully loaded. The automatic IceMaker with fixed water connection produces perfect half-moon crescent ice cubes, keeping a constant supply on hand for every occasion.

Liebherr offers an exterior water filter accessory for the CS 1400R-IM which can be placed into the cabinetry above or beside the appliance.

CS 1400R-IM Comfort

Duo Cooling | Ice Maker | Soft System | Smart Steel

Energy consumption	
in 365 days kWh	465
Estimated Yearly Energy Cost in US $*	56
Capacity	
Total capacity cu.ft. (l)	12.8 (363)
Refrigerator comp. cu.ft. (l)	9.8 (277)
NoFrost Freezer comp. cu.ft. (l)	3.0 (86)
Net weight lbs. (kg)	209.4 (95.0)
Climate rating	SN-T
Sound rating dB(A)**	42
Ice cube output lbs. (kg) / 24 h	3.1 (1.4)
Ice cube stock lbs. (kg)	5.5 (2.5)
Door hinges	right, reversible
Product dimensions	
in inch H/W/D	66 3/16" / 29 9/16" / 24 13/16"
in cm H/W/D	168 / 75 / 63
Cut out dimensions	
in inch H/W/D	67" / 30" / 24 1/16"
in cm H/W/D	170.1 / 76.2 / 61
Energy supply	
Voltage V/Hz	115 / 60
This unit is also available as	
CS 1401R-IM: with left door hinges	
Ventilation Requirements for installation per unit	200 cm² / 31 in²

Available accessories (from page 104)
1.1, 4.2, 4.3, 5.5, 7.4, 7.5, 7.9, 7.10

* Estimated energy cost will depend on utility rates and use. Estimated energy cost based on a national average electricity cost of 12 cents per KWh.

** Noise level – sound power re 1pW – according to EN 60704-3.

Freestanding/Semi Built-in

30"

The 30" **CS 1400R** refrigerator-freezer is the perfect appliance for installations of a smaller footprint with upper cabinets, while encompassing all of the great features and benefits of a Liebherr appliance. While being one of the most energy efficient appliances in its class, the CS 1400R includes smart interior design features like a foldable glass shelf, and a stainless steel back wall which prevents dripping and the build-up of ice. Liebherr's SmartSteel material on the door is scratch resistant and makes fingerprints virtually disappear, while doors close automatically and gently thanks to our SoftSystem technology, which eliminates slamming even when shelves are fully loaded.

Liebherr's DuoCooling system, with individual variable speed compressors, provides superior performance and efficiency, as well as advanced food preservation. The dual refrigeration system creates optimal conditions in both the refrigerator and freezer compartments, which lengthens the shelf life of foods for a healthier lifestyle. Individual silent cooling systems ensure accurate temperature and humidity controls so that your fresh foods never dry out.

CS 1400R Comfort

Duo Cooling | Soft System | Smart Steel

Energy consumption	
in 365 days kWh	359
Estimated Yearly Energy Cost in US $*	43
Capacity	
Total capacity cu.ft. (l)	12.8 (363)
Refrigerator comp. cu.ft. (l)	9.8 (277)
NoFrost Freezer comp. cu.ft. (l)	3.0 (86)
Net weight lbs. (kg)	205.0 (93.0)
Climate rating	SN-T
Sound rating dB(A)**	42
Door hinges	right, reversible
Product dimensions	
in inch H/W/D	66 3/16"/29 9/16"/24 13/16"
in cm H/W/D	168/75/63
Cut out dimensions	
in inch H/W/D	67"/30"/24 1/16"
in cm H/W/D	170.1/76.2/61
Energy supply	
Voltage V/Hz	115/60
Ventilation Requirements for installation per unit	200 cm²/31 in²

Available accessories (from page 104)
1.1, 5.5, 7.4, 7.5, 7.9, 7.10

* Estimated energy cost will depend on utility rates and use. Estimated energy cost based on a national average electricity cost of 12 cents per KWh.
** Noise level – sound power re 1pW – according to EN 60704-3.

36" Freestanding /Semi Built-in

The **CBS 2082** offers elegant French door styling, with self-closing double freezer drawers, available in 36" for freestanding/semi built-in designs. The CBS 2082 includes unique features such as BioFresh technology, which helps foods retain their healthy vitamins, aromas, and appetizing appearance for significantly longer than in conventional refrigerators. Outstanding LED lighting can be found on interior refrigerator columns and inside both BioFresh compartments, as well as inside the double freezer drawers. The automatic IceMaker with fixed water connection produces perfect half-moon crescent ice cubes, keeping a constant supply on hand for every occasion.

Liebherr's DuoCooling system, with individual variable speed compressors, provides superior performance and efficiency, as well as advanced food preservation. The dual refrigeration system creates optimal conditions in both the refrigerator and freezer compartments, which lengthens the shelf life of foods for a healthier lifestyle. Individual silent cooling systems ensure accurate temperature and humidity controls so that your fresh foods never dry out.

CBS 2082 PremiumPlus

Bio Fresh | Duo Cooling | Ice Maker | Telescopic Rails

Energy consumption	
in 365 days kWh	528
Estimated Yearly Energy Cost in US $*	63
Capacity	
Total capacity cu.ft. (l)	18.9 (535)
Refrigerator comp. cu.ft. (l)	12.9 (365)
BioFresh comp. cu.ft. (l)	2.4 (69)
NoFrost Freezer comp. cu.ft. (l)	6.0 (170)
Net weight lbs. (kg)	374.8 (170.0)
Climate rating	SN-T
Sound rating dB(A)**	44
Ice cube output lbs. (kg) / 24 h	3.1 (1.4)
Ice cube stock lbs. (kg)	7.9 (3.6)
Door hinges	left / right
Product dimensions	
in inch H/W/D	80 5/16" / 35 7/8" / 24 1/4"
in cm H/W/D	203.9 / 91 / 61.5
Cut out dimensions	
in inch H/W/D	80 9/16" / 36 1/16" / 24 1/16"
in cm H/W/D	204.5 / 91.5 / 61
Energy supply	
Voltage V/Hz	115 / 60

Available accessories (from page 104)
2.1, 2.2, 4.2, 6.1, 7.11

*Estimated energy cost will depend on utility rates and use. Estimated energy cost based on a national average electricity cost of 12 cents per KWh.
**Noise level – sound power re 1pW – according to EN 60704-3.

reddot award 2018 winner

PLUS X AWARD LIEBHERR High Quality Design Ease of Use

Freestanding/Semi Built-in

36"

The **CS 2082** offers elegant French door styling, with self-closing double freezer drawers, available in 36" for freestanding/semi built-in designs. Outstanding LED lighting can be found on interior refrigerator columns, which double as shelf support, as well as inside the freezer drawers. The automatic IceMaker with fixed water connection produces perfect half-moon crescent ice cubes, keeping a constant supply on hand for every occasion.

Liebherr's DuoCooling system, with individual variable speed compressors, provides superior performance and efficiency, as well as advanced food preservation. The dual refrigeration system creates optimal conditions in both the refrigerator and freezer compartments, which lengthens the shelf life of foods for a healthier lifestyle. Individual silent cooling systems ensure accurate temperature and humidity controls so that your fresh foods never dry out.

CS 2082 PremiumPlus

Duo Cooling | Ice Maker | Telescopic Rails

Energy consumption	
in 365 days kWh	533
Estimated Yearly Energy Cost in US $*	64
Capacity	
Total capacity cu.ft. (l)	19.5 (552)
Refrigerator comp. cu.ft. (l)	13.5 (382)
NoFrost Freezer comp. cu.ft. (l)	6.0 (170)
Net weight lbs. (kg)	374.8 (170.0)
Climate rating	SN-T
Sound rating dB(A)**	44
Ice cube output lbs. (kg) / 24 h	3.1 (1.4)
Ice cube stock lbs. (kg)	7.9 (3.6)
Door hinges	left / right
Product dimensions	
in inch H/W/D	80 5/16" / 35 7/8" / 24 1/4"
in cm H/W/D	203.9 / 91 / 61.5
Cut out dimensions	
in inch H/W/D	80 9/16" / 36 1/16" / 24 1/16"
in cm H/W/D	204.5 / 91.5 / 61
Energy supply	
Voltage V/Hz	115 / 60

Available accessories (from page 104)

2.1, 2.2, 4.2, 6.1, 7.11

* Estimated energy cost will depend on utility rates and use. Estimated energy cost based on a national average electricity cost of 12 cents per KWh.

** Noise level – sound power re 1pW – according to EN 60704-3.

Freestanding/Semi Built-in

36"

The 36" **CS 2081** refrigerator-freezer with single door refrigerator and self-closing double freezer drawers, fulfills both your design and storage needs. Outstanding LED lighting can be found on the ceiling and refrigerator side walls, which double as shelf support, as well as inside the freezer drawers. The fully extendable freezer drawers are designed with SoftTelescopic, which provides reliable self-retraction and soft closing. The automatic IceMaker with fixed water connection produces perfect half-moon crescent ice cubes, keeping a constant supply on hand for every occasion.

Liebherr's DuoCooling system, with individual variable speed compressors, provides superior performance and efficiency, as well as advanced food preservation. The dual refrigeration system creates optimal conditions in both the refrigerator and freezer compartments, which lengthens the shelf life of foods for a healthier lifestyle. Individual silent cooling systems ensure accurate temperature and humidity controls so that your fresh foods never dry out.

CS 2081 PremiumPlus

Duo Cooling | Ice Maker | Telescopic Rails

Energy consumption	
in 365 days kWh	532
Estimated Yearly Energy Cost in US $*	64
Capacity	
Total capacity cu.ft. (l)	19.5 (552)
Refrigerator comp. cu.ft. (l)	13.5 (382)
NoFrost Freezer comp. cu.ft. (l)	6.0 (170)
Net weight lbs. (kg)	383.6 (174.0)
Climate rating	SN-T
Sound rating dB(A)**	44
Ice cube output lbs. (kg) / 24 h	3.1 (1.4)
Ice cube stock lbs. (kg)	7.9 (3.6)
Door hinges	left
Product dimensions	
in inch H/W/D	79 13/16" / 35 7/8" / 24 1/4"
in cm H/W/D	202.7 / 91 / 61.5
Cut out dimensions	
in inch H/W/D	80" / 35 7/8" / 24 1/16"
in cm H/W/D	203.2 / 91 / 61
Energy supply	
Voltage V/Hz	115 / 60

This unit is also available as

CS 2080: with right door hinges

Available accessories (from page 104)

2.1, 2.2, 4.2, 6.1, 7.5, 7.11

* Estimated energy cost will depend on utility rates and use. Estimated energy cost based on a national average electricity cost of 12 cents per KWh.

** Noise level – sound power re 1pW – according to EN 60704-3.

Freestanding/Semi Built-in

48"

The 48" Side-by-Side combination **CS 1321 & CBS 1360** joins flexibility with sleek design. Thanks to its stainless steel side walls, the Side-by-Side combination can be featured as the centerpiece of your kitchen, or can be semi built-in into your kitchen cabinetry. With the Side-by-Side combination, you can achieve a flushed, built-in look with freestanding appliances without the added steps and cost of built-in installation.

Composed of two ENERGY STAR rated refrigerator-freezer models, CS 1321 and CBS 1360, the Side-by-Side combination provides flexible storage solutions within 4 full doors and 5 temperature zones. The CBS 1360 refrigerator includes unique features such as BioFresh technology, which helps foods retain their healthy vitamins, aromas, and appetizing appearance for significantly longer than in conventional refrigerators. Energy efficient LED lighting takes a starring role by illuminating the main compartments, and a unique integrated LED lights sit on the bottom of the refrigerator door to shine down into the freezer drawers when opened.

CS 1321 & CBS 1360 Premium

Bio Fresh | Ice Maker | Soft System | Soft Telescopic | Smart Steel

Capacity	
Total capacity cu.ft. (l)	24.7 (701)
Refrigerator comp. cu.ft. (l)	18.1 (513)
BioFresh comp. cu.ft. (l)	3.0 (85)
NoFrost Freezer comp. cu.ft. (l)	6.6 (188)
Net weight lbs. (kg)	414.5 (188.0)
Climate rating	SN-T
Ice cube output lbs. (kg) / 24 h	3.1 (1.4)
Ice cube stock lbs. (kg)	6.6 (3.0)
Door hinges	left, reversible / right, reversible
Product dimensions	
in inch H/W/D	79 9/16" / 47 3/4" / 26"
in cm H/W/D	202 / 121.2 / 66
Cut out dimensions	
in inch H/W/D	80" / 48" / 24 1/16"
in cm H/W/D	203.2 / 121.9 / 61
Energy supply	
Voltage V/Hz	115 / 60
left appliance:	**CS 1321**
Sound rating dB(A) **	42
Energy consumption	
in 365 days kWh	380
Estimated Yearly Energy Cost in US $*	46
right appliance:	**CBS 1360**
Sound rating dB(A) **	41
Energy consumption	
in 365 days kWh	480
Estimated Yearly Energy Cost in US $*	58
Ventilation Requirements for installation per unit	200 cm² / 31 in²
Individual appliances are ENERGY STAR rated	

Available accessories (from page 104)
1.1, 4.2, 4.3, 5.5, 7.4, 7.5, 7.12

* Estimated energy cost will depend on utility rates and use. Estimated energy cost based on a national average electricity cost of 12 cents per KWh.
** Noise level – sound power re 1pW – according to EN 60704-3.

Freestanding/Semi Built-in

60"

The 60" Side-by-Side combination **CBS 1661 & CBS 1660** joins flexibility with sleek design. Thanks to its stainless steel side walls, the Side-by-Side combination can be featured as the centerpiece of your kitchen, or can be semi built-in into your kitchen cabinetry for a flush look. With the Side-by-Side combination, you can achieve a flushed, built-in look with a freestanding model without the added steps and cost of built-in installation.

Composed of two ENERGY STAR rated refrigerator-freezer models, CBS 1661 and CBS 1660, the Side-by-Side combination provides flexible storage solutions within 4 full doors and 6 temperature zones. The individual appliances both include unique features such as BioFresh technology, which helps foods retain their healthy vitamins, aromas, and appetizing appearance for significantly longer than in conventional refrigerators. Energy efficient LED lighting takes a starring role by illuminating the main compartments, and unique integrated LED lights sit on the bottom of the refrigerator door to shine down into the freezer drawers when opened. The automatic IceMaker with fixed water connection produces perfect half-moon crescent ice cubes, keeping a constant supply on hand for every occasion.

CBS 1661 & CBS 1660 Premium

Bio Fresh | Ice Maker | Soft System | Soft Telescopic | Smart Steel

Capacity	
Total capacity cu.ft. (l)	29.9 (848)
Refrigerator comp. cu.ft. (l)	21.4 (606)
BioFresh comp. cu.ft. (l)	7.3 (206)
NoFrost Freezer comp. cu.ft. (l)	8.5 (242)
Net weight lbs. (kg)	511.5 (232.0)
Climate rating	SN-T
Ice cube output lbs. (kg) / 24 h	3.1 (1.4)
Ice cube stock lbs. (kg)	4.4 (2.0)
Door hinges	left, reversible / right, reversible
Product dimensions	
in inch H/W/D	79 9/16" / 58 3/8" / 26"
in cm H/W/D	202 / 148.2 / 66
Cut out dimensions	
in inch H/W/D	80" / 60" / 24 1/16"
in cm H/W/D	203.2 / 152.4 / 61
Energy supply	
Voltage V/Hz	115 / 60
right appliance:	**CBS 1660**
Sound rating dB(A) **	41
Energy consumption	
in 365 days kWh	488
Estimated Yearly Energy Cost in US $*	59
left appliance:	**CBS 1661**
This unit is also available with left door hinge	
Ventilation Requirements for installation per unit	200 cm² / 31 in²
Individual appliances are ENERGY STAR rated	

Available accessories (from page 104)
1.1, 4.2, 4.3, 5.5, 7.4, 7.5

* Estimated energy cost will depend on utility rates and use. Estimated energy cost based on a national average electricity cost of 12 cents per KWh.

** Noise level – sound power re 1pW – according to EN 60704-3.

HC 2080

Key Benefits – Fully Integrated Appliances

LED

Light columns: Premium appliances come with LED light columns, which incorporate multiple LED bulbs, evenly illumining the interior of the refrigerator. The special satin-finish on the lighting cover, and soft brightening of the lights upon opening, give an elegant and high-class ambiance.

Bio Cool

BioCool: BioCool regulates humidity to keep fruits and vegetables fresher for longer. The drawer extends smoothly on either a roller system or on premium-quality telescopic rails, both of which guarantee ease-of-use, convenient access, and a perfect view of stored products. Humidity is regulated via a slider control.

Telescopic Rails

Freezer drawers: Double freezer drawers mounted on telescopic rails offer plenty of storage space. A self-closing system for both drawers ensures an easy and convenient handling. The freezer drawers are perfectly illuminated by LED lights.

Ice Maker

IceMaker: Liebherr's automatic IceMaker produces perfect half-moon crescent ice cubes and keeps a constant supply on hand for every occasion.

Gallon storage on door: Liebherr refrigerators are designed to fit more cubic feet of your everyday life. The durable, yet elegant, GlassLine door racks easily hold gallon milk or juice on hand.

Super Quiet

SuperQuiet: Noise is kept to a minimum thanks to virtually silent, speed-controlled, and specially-absorbed compressors. Alongside a low noise cooling circuit, these features ensure exact performance, energy efficiency, and SuperQuiet operation.

Features shown are model dependent. Product features may vary.

Fully Integrated

24"

The sophisticated, elegant European design of the 24" **HCB 1060** refrigerator-freezer is the perfect appliance for small spaces, galley kitchens, or apartment living. The HCB 1060 blends in beautifully with any kitchen cabinetry, providing diverse design options to fit your dream kitchen. Liebherr's door-on-door technology allows for custom paneling to be affixed directly onto the appliance door, ensuring that the cabinet and refrigerator door open as one, allowing for additional design options and easy installation. Liebherr's automatic IceMaker with fixed water connection produces crystal clear ice cubes, keeping a constant supply on hand for every occasion.

This seamless, cabinet-deep HCB 1060 is slim in stature, yet full of innovative features such as BioFresh technology. While the DrySafe is suitable for storing meat, fish and milk products, the high level of humidity in the Fruit & Vegetable-Safe is even better at retaining the natural moisture in unpackaged fruit and vegetables. This means food not only stays fresher for longer, but also retains its vitamins and aroma for a considerably longer period than in a conventional fridge compartment. The practical FlexSystem helps to ensure neat separation and clear sorting.

HCB 1060 Premium

Bio Fresh | Duo Cooling | Ice Maker | Soft System | Soft Telescopic

Energy consumption	
in 365 days kWh	475
Estimated Yearly Energy Cost in US $*	57
Capacity	
Total capacity cu.ft. (l)	8.7 (247)
Refrigerator comp. cu.ft. (l)	6.3 (179)
BioFresh comp. cu.ft. (l)	2.4 (68)
NoFrost Freezer comp. cu.ft. (l)	2.4 (68)
Net weight lbs. (kg)	181.0 (82.1)
Climate rating	SN-T
Sound rating dB(A)**	38
Ice cube output lbs. (kg) / 24 h	1.8 (0.8)
Ice cube stock lbs. (kg)	2.2 (1.0)
Door hinges	right, reversible
Product dimensions	
in inch H/W/D	69 11/16"+11/16" / 22 1/16" / 21 7/16"
in cm H/W/D	177+1.6 / 55.9 / 54.4
Cut out dimensions (Cut out height does not include toe kick)	
in inch H/W/D	69 13/16"-70 7/16" / 22 1/16"-22 13/16" / 21 11/16"
in cm H/W/D	177.2-178.8 / 56-57.8 / 55
Energy supply	
Voltage V/Hz	115 / 60
Ventilation Requirements for installation per unit	200 cm² / 31 in²

Available accessories (from page 104)
7.4

* Estimated energy cost will depend on utility rates and use. Estimated energy cost based on a national average electricity cost of 12 cents per KWh.

** Noise level – sound power re 1pW – according to EN 60704-3.

24" Fully Integrated

The 24" **HC 1050B** refrigerator-freezer blends in beautifully with any kitchen cabinetry, providing diverse design options to fit your dream kitchen. Liebherr's door-on-door technology allows for custom paneling to be affixed directly onto the appliance door, ensuring that the cabinet and refrigerator door open as one, allowing for additional design options and easy installation. The refrigerator panel can be matched to cabinetry heights of up to 80" or 84" high for additional storage space over the refrigerator.

The HC 1050B includes a BioCool drawer which regulates humidity via a slider control to help keep fruits and vegetables fresher for longer. Liebherr's automatic IceMaker with fixed water connection produces crystal clear ice cubes, keeping a constant supply on hand for every occasion.

HC 1050B Comfort

Bio Cool | Duo Cooling | Ice Maker

Energy consumption	
in 365 days kWh	475
Estimated Yearly Energy Cost in US $*	57
Capacity	
Total capacity cu.ft. (l)	9.3 (264)
Refrigerator comp. cu.ft. (l)	6.9 (196)
NoFrost Freezer comp. cu.ft. (l)	2.4 (68)
Net weight lbs. (kg)	161.2 (73.1)
Climate rating	SN-T
Sound rating dB(A)**	38
Ice cube output lbs. (kg) / 24 h	1.8 (0.8)
Ice cube stock lbs. (kg)	2.2 (1.0)
Door hinges	right, reversible
Product dimensions	
in inch H/W/D	69 11/16"+11/16" / 22 1/16" / 21 7/16"
in cm H/W/D	177+1.6 / 55.9 / 54.4
Cut out dimensions (Cut out height does not include toe kick)	
in inch H/W/D	69 13/16"-70 7/16" / 22 1/16"-22 13/16" / 21 11/16"
in cm H/W/D	177.2-178.8 / 56-57.8 / 55
Energy supply	
Voltage V/Hz	115 / 60
This unit is also available as	
HC 1030: without IceMaker	
Ventilation Requirements for installation per unit	200 cm² / 31 in²

Available accessories (from page 104)

7.4

* Estimated energy cost will depend on utility rates and use. Estimated energy cost based on a national average electricity cost of 12 cents per KWh.
** Noise level – sound power re 1pW – according to EN 60704-3.

30" Fully Integrated

Hidden away behind custom cabinetry or shown off with optional Liebherr designed stainless steel panels, the stylish and sleek 30" fully integrated **HCB 1580** refrigerator-freezer offers impressive performance features and design flexibility. Smart interior design features include the elegant, yet tough, space-saving GlassLine shelves, and a stainless steel back wall which prevents dripping and the build-up of ice. The automatic IceMaker with fixed water connection produces perfect half-moon crescent ice cubes, which can be taken from freezer-to-table thanks to the removable ice bin.

Liebherr's BioFresh technology helps foods retain their healthy vitamins, aromas, and appetizing appearance for significantly longer than in conventional refrigerators. Each BioFresh drawer can be adjusted individually, and provides ideal humidity for versatile storage solutions. The smart DuoCooling system, with individual variable speed compressors, ensures that there is no air exchange between the refrigerator and freezer compartments, guaranteeing that food won't dry out, and that the freezer is always ice-free.

HCB 1580 PremiumPlus

Bio Fresh | Duo Cooling | Ice Maker | Telescopic Rails

Energy consumption	
in 365 days kWh	507
Estimated Yearly Energy Cost in US $*	61
Capacity	
Total capacity cu.ft. (l)	14.1 (400)
Refrigerator comp. cu.ft. (l)	9.8 (278)
BioFresh comp. cu.ft. (l)	2.1 (60)
NoFrost Freezer comp. cu.ft. (l)	4.3 (122)
Net weight lbs. (kg)	332.9 (151.0)
Climate rating	SN-T
Sound rating dB(A)**	42
Ice cube output lbs. (kg) / 24 h	3.1 (1.4)
Ice cube stock lbs. (kg)	7.9 (3.6)
Door hinges	right
Product dimensions	
in inch H/W/D	79 13/16" / 29 13/16" / 24 1/16"
in cm H/W/D	202.7 / 75.7 / 61
Cut out dimensions	
in inch H/W/D	80"-81 5/8" / 30" / 24 1/16"
in cm H/W/D	203.2-207.2 / 76.2 / 61
Energy supply	
Voltage V/Hz	115 / 60

This unit is also available as

HCB 1581: with left door hinges

Available accessories (from page 104)

2.1, 2.2, 4.2, 5.1, 5.3, 6.1, 7.3, 7.4, 7.5, 8.6, 8.7, 8.8

*Estimated energy cost will depend on utility rates and use. Estimated energy cost based on a national average electricity cost of 12 cents per KWh.
**Noise level – sound power re 1pW – according to EN 60704-3.

PLUS X AWARD
LIEBHERR
High Quality
Design
Ease of Use
Ecology

30" Fully Integrated

The 30" **HC 1550** refrigerator-freezer blends in beautifully with any kitchen cabinetry, providing diverse design options to fit your dream kitchen. Liebherr's door-on-door technology allows for custom paneling to be affixed directly onto the appliance door, ensuring that the cabinet and refrigerator door open as one, allowing for additional design options and easy installation.

Double freezer drawers mounted on smooth telescopic rails offer more than 4 cubic feet of storage space, along with convenient handling and viewing of food stored. The automatic IceMaker with fixed water connection produces perfect half-moon crescent ice cubes, keeping a constant supply on hand for every occasion.

HC 1550 Premium

Duo Cooling | Ice Maker | Telescopic Rails

Energy consumption	
in 365 days kWh	507
Estimated Yearly Energy Cost in US $*	61
Capacity	
Total capacity cu.ft. (l)	14.1 (400)
Refrigerator comp. cu.ft. (l)	9.8 (278)
NoFrost Freezer comp. cu.ft. (l)	4.3 (122)
Net weight lbs. (kg)	321.9 (146.0)
Climate rating	SN-T
Sound rating dB(A)**	42
Ice cube output lbs. (kg) / 24 h	3.1 (1.4)
Ice cube stock lbs. (kg)	7.9 (3.6)
Door hinges	right
Product dimensions	
in inch H/W/D	79 13/16" / 29 13/16" / 24 1/16"
in cm H/W/D	202.7 / 75.7 / 61
Cut out dimensions	
in inch H/W/D	80"-81 5/8" / 30" / 24 1/16"
in cm H/W/D	203.2-207.2 / 76.2 / 61
Energy supply	
Voltage V/Hz	115 / 60

This unit is also available as

HC 1551: with left door hinges

HC 1540: with IceMaker and 50 oz water tank

HC 1541: with IceMaker and 50 oz water tank; door hinges left

Available accessories (from page 104)

4.2, 5.1, 5.3, 7.3, 7.4, 7.5, 8.6, 8.7, 8.8

* Estimated energy cost will depend on utility rates and use. Estimated energy cost based on a national average electricity cost of 12 cents per KWh.
** Noise level – sound power re 1pW – according to EN 60704-3.

Fully Integrated

36"

The **HCB 2082** offers elegant French door styling, with self-closing double freezer drawers, available in 36" design for custom kitchens. Choose from the fully integrated HCB 2082 concealed behind custom cabinetry, or the professional aesthetics of stainless steel panels. Standard accessories for this series are available for adapting to 80" or 84" high installation requirements. Smart interior design features include a stainless steel back wall which prevents dripping and the build-up of ice, and fully extendable SoftTelescopic freezer drawers which provide reliable self-retraction and soft closing. The HCB 2082 includes BioFresh technology, which helps foods retain their healthy vitamins, aromas, and appetizing appearance for significantly longer than in conventional refrigerators. The automatic IceMaker with fixed water connection produces perfect half-moon crescent ice cubes, which can be taken from freezer-to-table thanks to the removable ice bin.

Liebherr's DuoCooling system, with individual variable speed compressors, provides superior performance and efficiency, as well as advanced food preservation. The dual refrigeration system creates optimal conditions in both the refrigerator and freezer compartments, which lengthens the shelf life of foods for a healthier lifestyle. Individual silent cooling systems ensure accurate temperature and humidity controls so that your fresh foods never dry out.

HCB 2082 PremiumPlus

Bio Fresh | Duo Cooling | Ice Maker | Soft System | Telescopic Rails

Energy consumption	
in 365 days kWh	556
Estimated Yearly Energy Cost in US $*	67
Capacity	
Total capacity cu.ft. (l)	18.9 (535)
Refrigerator comp. cu.ft. (l)	12.9 (365)
BioFresh comp. cu.ft. (l)	2.4 (69)
NoFrost Freezer comp. cu.ft. (l)	6.0 (170)
Net weight lbs. (kg)	361.6 (164.0)
Climate rating	SN-T
Sound rating dB(A)**	43
Ice cube output lbs. (kg) / 24 h	3.1 (1.4)
Ice cube stock lbs. (kg)	7.9 (3.6)
Door hinges	left / right
Product dimensions	
in inch H/W/D	79 13/16" / 35 7/8" / 24 1/16"
in cm H/W/D	202.7 / 91 / 61
Cut out dimensions	
in inch H/W/D	80"-81 5/8" / 36 1/16" / 24 5/8"
in cm H/W/D	203.2-207.2 / 91.5 / 62.5
Energy supply	
Voltage V/Hz	115 / 60

Available accessories (from page 104)
2.1, 2.2, 4.2, 5.1, 5.3, 6.1, 8.6, 8.7, 8.8

* Estimated energy cost will depend on utility rates and use. Estimated energy cost based on a national average electricity cost of 12 cents per KWh.

** Noise level – sound power re 1pW – according to EN 60704-3.

36"

Fully Integrated

Show off the materials and design of your custom kitchen to the fullest with the stylish fully integrated refrigerator-freezer **HCB 2080**. Outstanding LED lighting can be found on the ceiling and refrigerator side walls, which double as shelf support, as well as inside the freezer drawers. Other smart interior design features include a stainless steel back wall which prevents dripping and the build-up of ice, and fully extendable SoftTelescopic freezer drawers which provide reliable self-retraction and soft closing. The automatic IceMaker with fixed water connection produces perfect half-moon crescent ice cubes, which can be taken from freezer-to-table thanks to the removable ice bin.

Liebherr's BioFresh technology helps foods retain their healthy vitamins, aromas, and appetizing appearance for significantly longer than in conventional refrigerators. Each BioFresh drawer can be adjusted individually, and provides ideal humidity for versatile storage solutions. The smart DuoCooling system, with individual variable speed compressors, ensures that there is no air exchange between the refrigerator and freezer compartments, guaranteeing that food won't dry out, and that the freezer is always ice-free.

HCB 2080 PremiumPlus

Bio Fresh | Duo Cooling | Ice Maker | Telescopic Rails

Energy consumption	
in 365 days kWh	556
Estimated Yearly Energy Cost in US $*	67
Capacity	
Total capacity cu.ft. (l)	18.9 (535)
Refrigerator comp. cu.ft. (l)	12.9 (365)
BioFresh comp. cu.ft. (l)	2.4 (69)
NoFrost Freezer comp. cu.ft. (l)	6.0 (170)
Net weight lbs. (kg)	368.2 (167.0)
Climate rating	SN-T
Sound rating dB(A)**	43
Ice cube output lbs. (kg) / 24 h	3.1 (1.4)
Ice cube stock lbs. (kg)	7.9 (3.6)
Door hinges	right
Product dimensions	
in inch H/W/D	79 13/16" / 35 7/8" / 24 1/16"
in cm H/W/D	202.7 / 91 / 61
Cut out dimensions	
in inch H/W/D	80"-81 5/8" / 36 1/16" / 24 5/8"
in cm H/W/D	203.2-207.2 / 91.5 / 62.5
Energy supply	
Voltage V/Hz	115 / 60

This unit is also available as
HCB 2081: with left door hinges

Available accessories (from page 104)
2.1, 2.2, 4.2, 5.1, 5.3, 6.1, 7.3, 7.4, 7.5, 8.6, 8.7, 8.8

*Estimated energy cost will depend on utility rates and use. Estimated energy cost based on a national average electricity cost of 12 cents per KWh.
**Noise level – sound power re 1pW – according to EN 60704-3.

Fully Integrated

36"

The **HC 2082** offers elegant French door styling, with self-closing double freezer drawers, available in 36" design for custom kitchens. Choose from the fully integrated HC 2082 concealed behind custom cabinetry or the professional aesthetics of stainless steel panels. Standard accessories for this series are available for adapting to 80" or 84" high installation requirements. The automatic IceMaker with fixed water connection produces perfect half-moon crescent ice cubes, keeping constant supply on hand for every occasion.

Liebherr's DuoCooling system, with individual variable speed compressors, provides superior performance and efficiency, as well as advanced food preservation. The dual refrigeration system creates optimal conditions in both the refrigerator and freezer compartments, which lengthens the shelf life of foods for a healthier lifestyle. Individual silent cooling systems ensure accurate temperature and humidity controls so that your fresh foods never dry out.

HC 2082 PremiumPlus

Duo Cooling | Ice Maker | Soft System | Telescopic Rails

Energy consumption	
in 365 days kWh	562
Estimated Yearly Energy Cost in US $*	67
Capacity	
Total capacity cu.ft. (l)	19.5 (552)
Refrigerator comp. cu.ft. (l)	13.5 (382)
NoFrost Freezer comp. cu.ft. (l)	6.0 (170)
Net weight lbs. (kg)	368.2 (167.0)
Climate rating	SN-T
Sound rating dB(A)**	44
Ice cube output lbs. (kg) / 24 h	3.1 (1.4)
Ice cube stock lbs. (kg)	7.9 (3.6)
Door hinges	left / right
Product dimensions	
in inch H/W/D	79 13/16" / 36" / 24 1/16"
in cm H/W/D	202.7 / 91.4 / 61
Cut out dimensions	
in inch H/W/D	80"-81 5/8" / 36" / 24 5/8"
in cm H/W/D	203.2-207.2 / 91.44 / 62.5
Energy supply	
Voltage V/Hz	115 / 60

Available accessories (from page 104)

2.1, 2.2, 4.2, 5.1, 5.3, 6.1, 8.6, 8.7, 8.8

* Estimated energy cost will depend on utility rates and use. Estimated energy cost based on a national average electricity cost of 12 cents per KWh.

** Noise level – sound power re 1pW – according to EN 60704-3.

Fully Integrated

36"

The 36" **HC 2080** refrigerator-freezer with single refrigerator door and self-closing double freezer drawers, fulfills both your design and storage needs. Outstanding LED lighting can be found on the ceiling and refrigerator side walls, which double as shelf support, as well as inside the freezer drawers. The fully extendable freezer drawers are designed with SoftTelescopic, which provides reliable self-retraction and soft closing. The automatic IceMaker with fixed water connection produces perfect half-moon crescent ice cubes, keeping a constant supply on hand for every occasion.

Liebherr's DuoCooling system, with individual variable speed compressors, provides superior performance and efficiency, as well as advanced food preservation. The dual refrigeration system creates optimal conditions in both the refrigerator and freezer compartments, which lengthens the shelf life of foods for a healthier lifestyle. Individual silent cooling systems ensure accurate temperature and humidity controls so that your fresh foods never dry out.

HC 2080 PremiumPlus

Duo Cooling | Ice Maker | Telescopic Rails

Energy consumption	
in 365 days kWh	562
Estimated Yearly Energy Cost in US $*	67
Capacity	
Total capacity cu.ft. (l)	19.5 (552)
Refrigerator comp. cu.ft. (l)	13.5 (382)
NoFrost Freezer comp. cu.ft. (l)	6.0 (170)
Net weight lbs. (kg)	372.6 (169.0)
Climate rating	SN-T
Sound rating dB(A)**	44
Ice cube output lbs. (kg) / 24 h	3.1 (1.4)
Ice cube stock lbs. (kg)	7.9 (3.6)
Door hinges	right
Product dimensions	
in inch H/W/D	79 13/16" / 35 7/8" / 24 1/16"
in cm H/W/D	202.7 / 91 / 61
Cut out dimensions	
in inch H/W/D	80"-81 5/8" / 36 1/16" / 24 5/8"
in cm H/W/D	203.2-207.2 / 91.5 / 62.5
Energy supply	
Voltage V/Hz	115 / 60

This unit is also available as

HC 2081: with left door hinges

Available accessories (from page 104)

2.1, 2.2, 4.2, 5.1, 5.3, 6.1, 7.3, 7.4, 7.5, 8.6, 8.7, 8.8

* Estimated energy cost will depend on utility rates and use. Estimated energy cost based on a national average electricity cost of 12 cents per KWh.

** Noise level – sound power re 1pW – according to EN 60704-3.

Fully Integrated

48"

Liebherr's 48" Side-by-Side combination, made of the 24" **HRB 1120** fully integrated refrigerator with BioFresh and the 24" **HF 861** fully integrated freezer with IceMaker, is the perfect combination for any kitchen.

HF 861 & HRB 1120 Premium

Bio Fresh | Ice Maker | Soft System | Soft Telescopic

left appliance:	**HF 861**
Energy consumption	
in 365 days kWh	439
Estimated Yearly Energy Cost in US $*	53
Capacity	
Total capacity cu.ft. (l)	7.8 (220)
NoFrost Freezer comp. cu.ft. (l)	7.8 (220)
Net weight lbs. (kg)	171.1 (77.6)
Climate rating	SN-T
Sound rating dB(A)**	38
Ice cube output lbs. (kg) / 24 h	1.8 (0.8)
Ice cube stock lbs. (kg)	3.3 (1.5)
Door hinges	left, reversible
Product dimensions	
in inch H/W/D	69 11/16"+11/16" / 22 1/16" / 21 7/16"
in cm H/W/D	177+1.6 / 55.9 / 54.4
Cut out dimensions (Cut out height does not include toe kick)	
in inch H/W/D	69 13/16"-70 7/16" / 22 1/16"-22 13/16" / 21 11/16"
in cm H/W/D	177.2-178.8 / 56-57.8 / 55
Energy supply	
Voltage V/Hz	115 / 60

right appliance:	**HRB 1120**
Energy consumption	
in 365 days kWh	283
Estimated Yearly Energy Cost in US $*	34
Capacity	
Total capacity cu.ft. (l)	14.1 (400)
Refrigerator comp. cu.ft. (l)	10.9 (308)
BioFresh comp. cu.ft. (l)	3.2 (92)
Net weight lbs. (kg)	158.1 (71.7)
Climate rating	SN-T
Sound rating dB(A)**	33
Door hinges	right, reversible
Product dimensions	
in inch H/W/D	69 11/16"+11/16" / 22 1/16" / 21 7/16"
in cm H/W/D	177+1.6 / 55.9 / 54.4
Cut out dimensions (Cut out height does not include toe kick)	
in inch H/W/D	69 13/16"-70 7/16" / 22 1/16"-22 13/16" / 21 11/16"
in cm H/W/D	177.2-178.8 / 56-57.8 / 55
Energy supply	
Voltage V/Hz	115 / 60

Ventilation Requirements for installation per unit	200 cm² / 31 in²
Individual appliances are ENERGY STAR rated	

Available accessories (from page 104)

4.2, 7.4, 8.4

* Estimated energy cost will depend on utility rates and use. Estimated energy cost based on a national average electricity cost of 12 cents per KWh.

** Noise level – sound power re 1pW – according to EN 60704-3.

Unit Dimensions

Cabinetry panels attach directly onto the appliance door(s) (door-on-door technology).
No cabinet hinges are required.
*Recommended: 22" (560 mm)

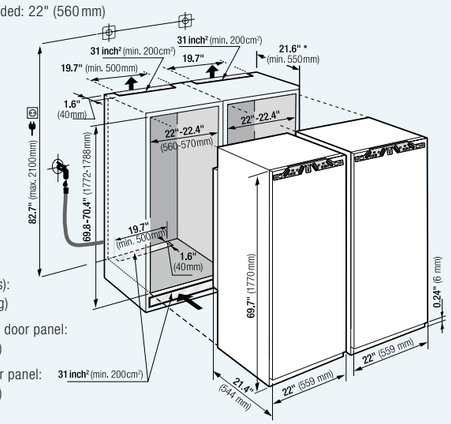

Maximum weight of door panel(s): 114 lb (52 kg)

Refrigerator door panel: 57 lb (26 kg)

Freezer door panel: 57 lb (26 kg)

PLUS X AWARD
LIEBHERR
High Quality
Ease of Use
Functionality
Ecology

RO 510

Key Benefits – Undercounter Appliances

Soft Telescopic

SoftTelescopic: Food can be stored securely within reach thanks to fully extendible pull-out drawers. The SoftTelescopic system provides convenient and reliable self-retraction with soft closing.

Glass pull-out shelves: Food is stored safely and easily accessible on the fully extendible pull-out glass shelves. The glass pull-out shelves made of safety glass are sturdy and easy to clean as well as being adjustable by means of practical rail dividers.

Ventilation: Liebherr's undercounter appliances are available for integrated use or for fitting with décor panels. Ventilation occurs through the base plinth, so a ventilation grill is not required on top of the appliance.

ADA Compliant

ADA compliant: Liebherr's undercounter appliances are ADA compliant, designed to fit undercounter heights between 32" and 34".

LiftUp Box

LiftUp-Box: The LiftUp-Box allows you to fully utilise the storage space below the pull-out drawer. It is ergonomically attached, easy to take out and can hold up to 8.8 lbs. (4 kg). When pulled out, the LiftUp-Box pushes up out of the base recess, allowing the food to be removed easily.

Soft System

SoftSystem: This feature provides added safety and convenience. Integrated on the door, the SoftSystem cushions movement when the door is closed. This SoftSystem ensures that the door closes gently even when fully loaded inside. The door automatically closes from an angle of approximately 30°.

Features shown are model dependent. Product features may vary.

Undercounter Refrigerator

24"

The **UPR 513** takes both the designer and the user in mind, offering convenient features and design flexibility to fit any home. The universally designed, pull-out undercounter refrigerator can be adjusted in height to match that of the counter space, providing an optimal fit for countertops up to 34" high. Like all Liebherr integrated appliances, the UPR 513 uses door-on-door technology, allowing custom panels to be affixed directly onto the appliance door, ensuring seamless integration within your custom design, as well as easy installation.

The UPR 513 includes a variety of flexible storage features to fit your specific needs. The door bin can be used to store tall beverages, or can be adjusted for larger gallon storage. Items stored in the bottom bin are automatically raised upon door opening thanks to the LiftUp-Box system, bringing your foods closer and easier within reach. The UPR 513's fully extendable SoftTelescopic drawers provide reliable self-retraction and soft closing, while the elegant, yet tough, spacesaving GlassLine shelves are both scratch resistant and easy to clean.

Noise is kept to a minimum thanks to virtually silent, speed controlled, and specially-absorbed compressors along with a low noise cooling circuit, ensuring exact performance, energy efficiency and SuperQuiet operation.

UPR 513 Premium

Soft System | Soft Telescopic | LiftUp Box | ADA Compliant

Energy consumption	
in 365 days kWh	225
Estimated Yearly Energy Cost in US $*	27
Capacity	
Total capacity cu.ft. (l)	4.4 (124)
Refrigerator comp. cu.ft. (l)	4.4 (124)
Temperature range °F (°C)	+36 to +48 (+2 to +9)
Net weight lbs. (kg)	96.3 (43.7)
Climate rating	SN-T
Sound rating dB(A)**	37
Door hinges	pull-out
Product dimensions	
in inch H/W/D	32 5/16"-34 11/16" / 23 9/16" / 21 11/16"
in cm H/W/D	82-88 / 59.7 / 55
Cut out dimensions	
in inch H/W/D	32 5/16"-34 11/16" / 23 5/8" / 21 11/16"
in cm H/W/D	82-88 / 60 / 55
Energy supply	
Voltage V/Hz	115 / 60

Available accessories (from page 104)

5.1, 5.4, 7.1, 8.3

* Estimated energy cost will depend on utility rates and use. Estimated energy cost based on a national average electricity cost of 12 cents per KWh.

** Noise level – sound power re 1pW – according to EN 60704-3.

24" Undercounter Refrigerator

The 24" **UR 500** takes both the designer and the user in mind, offering convenient features and design flexibility to fit any room, whether it's in a home or business. The universally designed, single-door undercounter refrigerator can be adjusted in height to match that of the counter space, providing an optimal fit for countertops up to 34" high. Like all Liebherr integrated appliances, the UR 500 uses door-on-door technology, allowing custom panels to be affixed directly onto the appliance door, ensuring seamless integration within your custom design, as well as easy installation.

As a true undercounter refrigerator, the UR 500 offers the perfect solution for storing your favorite foods in any room, whether it be in the kitchen island, office, or home theater. The UR 500 includes a variety of flexible storage features, like a large removable VarioBox that can be taken from fridge-to-table, multi-use drawer, and an additional storage bin at the bottom of the refrigerator. The UR 500 includes convenient door racks, even for larger gallon items. Doors close automatically and gently thanks to our SoftSystem technology which eliminates slamming, even when shelves are fully loaded.

The UR 500 can be installed in a Side-by-Side combination alongside other undercounter refrigerators, freezers, beverage centers, or wine cabinets as part of a central food and beverage hub. Noise is kept to a minimum thanks to virtually silent, speed controlled, and specially-absorbed compressors along with a low noise cooling circuit, ensuring exact performance, energy efficiency and SuperQuiet operation.

UR 500 Premium

Soft System | ADA Compliant

Energy consumption	
in 365 days kWh	227
Estimated Yearly Energy Cost in US $*	27
Capacity	
Total capacity cu.ft. (l)	4.8 (136)
Refrigerator comp. cu.ft. (l)	4.8 (136)
Temperature range °F (°C)	+36 to +48 (+2 to +9)
Net weight lbs. (kg)	84.2 (38.2)
Climate rating	SN-T
Sound rating dB(A)**	37
Door hinges	right, reversible
Product dimensions	
in inch H/W/D	32 5/16"-34 11/16"/23 9/16"/21 11/16"
in cm H/W/D	82-88/59.7/55
Cut out dimensions	
in inch H/W/D	32 5/16"-34 11/16"/23 5/8"/21 11/16"
in cm H/W/D	82-88/60/55
Energy supply	
Voltage V/Hz	115/60

Available accessories (from page 104)

5.1, 5.4, 7.1, 8.3

*Estimated energy cost will depend on utility rates and use. Estimated energy cost based on a national average electricity cost of 12 cents per KWh.
**Noise level – sound power re 1pW – according to EN 60704-3.

Undercounter Refrigerator

24"

The 24" **UB 501** takes both the designer and the user in mind, offering convenient features and design flexibility to fit any room, whether it's in a home or business. The universally designed, single-door 32 °F refrigerator can be adjusted in height to match that of the counter space, providing an optimal fit for countertops up to 34" high. Like all Liebherr integrated appliances, the UB 501 uses door-on-door technology, allowing custom panels to be affixed directly onto the appliance door, ensuring seamless integration within your custom design, as well as easy installation.

This UB 501 consists of three full BioFresh compartments, which helps foods retain their healthy vitamins, aromas, and appetizing appearance for significantly longer than in conventional refrigerators. Included in one of the BioFresh drawers is Liebherr's FlexSystem storage solution, where fruits and vegetables can be clearly organized and separated, or stored according use-by date. The UB 501 also includes a hidden compartment at the bottom of the refrigerator for additional storage. This undercounter model is the perfect solution for when you require additional storage of your freshest and healthiest organic foods.

The UB 501 can be installed in a Side-by-Side combination alongside other undercounter refrigerators, freezers, beverage centers, or wine cabinets as part of a central food and beverage hub. Noise is kept to a minimum thanks to virtually silent, speed controlled, and specially-absorbed compressors along with a low noise cooling circuit, ensuring exact performance, energy efficiency and SuperQuiet operation.

UB 501 Premium

Bio Fresh | Soft System | ADA Compliant

Energy consumption	
in 365 days kWh	214
Estimated Yearly Energy Cost in US $*	26
Capacity	
Total capacity cu.ft. (l)	2.8 (80)
BioFresh comp. cu.ft. (l)	2.8 (80)
Temperature range °F (°C)	+32 (0)
Net weight lbs. (kg)	83.6 (37.9)
Climate rating	SN-T
Sound rating dB(A)**	38
Door hinges	left, reversible
Product dimensions	
in inch H/W/D	32 5/16"-34 11/16" / 23 9/16" / 21 11/16"
in cm H/W/D	82-88 / 59.7 / 55
Cut out dimensions	
in inch H/W/D	32 5/16"-34 11/16" / 23 5/8" / 21 11/16"
in cm H/W/D	82-88 / 60 / 55
Energy supply	
Voltage V/Hz	115 / 60

Available accessories (from page 104)

5.1, 5.4, 7.1, 8.3

* Estimated energy cost will depend on utility rates and use. Estimated energy cost based on a national average electricity cost of 12 cents per KWh.

** Noise level – sound power re 1pW – according to EN 60704-3.

Undercounter Freezer

24"

The **UF 501** takes both the designer and the user in mind, offering convenient features and design flexibility to fit any room, whether it's in a home or business. The universally designed, single-door freezer can be adjusted in height to match that of the counter space, providing an optimal fit for countertops up to 34" high. Like all Liebherr integrated appliances, the UF 501 uses door-on-door technology, allowing custom panels to be affixed directly onto the appliance door, ensuring seamless integration within your custom design, as well as easy installation.

As a true undercounter freezer, the UF 501 offers the perfect solution for storing your favorite frozen foods in any room, whether it be in the kitchen island, bar, or game room. This 24" freezer includes three transparent and fully removable FrostSafe drawers on rollers to best organize frozen foods. As the FrostSafe drawers are fully enclosed, the continuously circulating cold air does not escape when the door is opened, enhancing the freezer's energy efficiency. Doors also close gently and without slamming thanks to Liebherr's SoftSystem technology. The UF 501 also includes a hidden compartment at the bottom of the freezer for additional storage.

The UF 501 can be installed in a Side-by-Side combination alongside other undercounter refrigerators, freezers, beverage centers, or wine cabinets as part of a central food and beverage hub. Noise is kept to a minimum thanks to virtually silent, speed controlled, and specially absorbed compressors along with a low noise cooling circuit, ensuring exact performance, energy efficiency and SuperQuiet operation.

UF 501 Premium

LED | Soft System | ADA Compliant

Energy consumption	
in 365 days kWh	302
Estimated Yearly Energy Cost in US $*	36
Capacity	
Total capacity cu.ft. (l)	2.8 (79)
NoFrost Freezer comp. cu.ft. (l)	2.8 (79)
Temperature range °F (°C)	+7 to +18 (+14 to +28)
Net weight lbs. (kg)	88.0 (39.9)
Climate rating	SN-T
Sound rating dB(A)**	38
Door hinges	left, reversible
Product dimensions	
in inch H/W/D	32 5/16"-34 11/16" / 23 9/16" / 21 11/16"
in cm H/W/D	82-88 / 59.7 / 55
Cut out dimensions	
in inch H/W/D	32 5/16"-34 11/16" / 23 5/8" / 21 11/16"
in cm H/W/D	82-88 / 60 / 55
Energy supply	
Voltage V/Hz	115 / 60

Available accessories (from page 104)

5.1, 5.4, 7.1, 8.3

* Estimated energy cost will depend on utility rates and use. Estimated energy cost based on a national average electricity cost of 12 cents per KWh.

** Noise level – sound power re 1pW – according to EN 60704-3.

24" Undercounter Beverage Center

Liebherr's sleek **RU 510** 24" beverage/wine center stores a variety of drinks to perfection, while keeping them close at hand in any kitchen, bar, or entertainment area. Whether you're entertaining a large group, or having a quiet family night at home, the RU 510 offers amazing capacity and superior storage, with sophisticated design that blends beautifully with any decor.

The RU 510 features a glass door for a clear view of stored beverages, and an elegant stainless steel frame that can also accommodate a custom panel if desired. The appliance offers a variety of storage flexibility options thanks to the glass shelves with stainless steel trim, a convenient split shelf for storing taller items, and a pull-out metal rack. The electronic control system is situated at the top of the interior and is visible through the glass door, allowing for temperature settings between 36°F to 68°F.

RU 510 GrandCru

LED | Telescopic Rails | ADA Compliant

Capacity	
Total capacity cu.ft. (l)	3.8 (108)
Wine comp. cu.ft. (l)	3.8 (108)
Total cans storage capacity (0.33 l)	114
Temperature range °F (°C)	+36 to +68 (+2 to +20)
Net weight lbs. (kg)	103.6 (47.0)
Climate rating	SN-ST
Sound rating dB(A)*	39
Door hinges	right, reversible
Product dimensions	
in inch H/W/D	32 1/4"/23 9/16"/22 3/4"
in cm H/W/D	81.8/59.7/57.7
Cut out dimensions	
in inch H/W/D	32 5/16"-34 5/16"/23 5/8"/21 11/16"
in cm H/W/D	82-87/60/55
Energy supply	
Voltage V/Hz	115/60

Available accessories (from page 104)
5.2, 7.2, 7.5, 7.6, 7.8

*Noise level – sound power re 1pW – according to EN 60704-3.

24"

Outdoor Cooler

The 24" **RO 510** outdoor undercounter beverage/wine cooler is the ultimate barbecue and entertainment accessory, turning your outdoor kitchen into the ultimate place for entertaining. This model offers the best solution to store beverages such as wine, beer and soft drinks, as well as barbecue supplies and condiments, close at hand without compromising on elegance and design.

The temperature of the RO 510 can be set between 36°F and 68°F for a variety of uses. This outdoor appliance includes three glass shelves with stainless steel trim for flexible storage, including a versatile split shelf for storing taller items, and two door racks (one adjustable). This model is perfect for outdoor entertaining, operating perfectly in ambient temperatures from 50°F to 109°F. Because of its sophisticated stainless steel look, the RO 510 can also be used indoors within a kitchen or bar for added convenience.

RO 510

LED | Telescopic Rails | ADA Compliant

Capacity	
Total capacity cu.ft. (l)	3.7 (104)
Wine comp. cu.ft. (l)	3.7 (104)
Temperature range °F (°C)	+36 to +68 (+2 to +20)
Net weight lbs. (kg)	112.4 (51.0)
Climate rating	SN-T
Sound rating dB(A)*	39
Door hinges	right, reversible
Product dimensions	
in inch H/W/D	32 1/4"/23 9/16"/22 3/4"
in cm H/W/D	81.8/59.7/57.7
Cut out dimensions	
in inch H/W/D	32 5/16"-34 5/16"/23 5/8"/21 11/16"
in cm H/W/D	82-87/60/55
Energy supply	
Voltage V/Hz	115/60

Available accessories (from page 104)
5.2

* Noise level – sound power re 1pW – according to EN 60704-3.

WS 17800

Key Benefits – Wine Cabinets

LED lighting: All Liebherr wine cabinets are equipped with innovative LED lighting, which can be dimmed for a pleasing ambient light inside the wine cabinet, while emitting less heat, optimal for long-term illumination.

Presentation shelf: The practical shelf of the Vinidor models fulfills both bottle storage and presentation functions. The bottles can be stored horizontally at the rear.

Activated charcoal filter: During prolonged storage, wines can be adversely affected by environmental odors. Optimum air quality is guaranteed in Liebherr wine cabinets thanks to the easy-to-replace activated charcoal filter, which purifies incoming air.

Integrated lock: The integrated lock is very sturdy and protects your fine wine collection against unauthorised access.

Electronic LCD display: Touch electronic control systems allow the temperature to be set to the exact desired degree, easily and accurately thanks to the electronic LCD display.

Compressors: Even slight vibrations can disturb the wine maturing process and prevent the tannins from settling. Specially developed, exceptionally low-vibration compressors are included in all Liebherr wine cabinets, ensuring that wine is optimally stored.

Wine models are intended for storing wine exclusively. Maximum indicated bottle capacity is based on Bordeaux bottles (0.75 l).
Features shown are model dependent. Product features may vary.

24" Wine Cabinets

The fully integrated **HW 8000** multi-temperature wine cabinet is sure to compliment any kitchen, bar, or living room design. The temperature in each of the two sophisticated temperature zones can be set between 41°F and 68°F, ensuring optimal storage conditions for suitable for storing reds, whites, and champagnes. The HW 8000 provides storage flexibility for up to 80 Bordeaux bottles thanks to its beech wood shelving and ten storage areas at varying heights, ideal for grouping different bottles types and sizes. A flexible clip-on labelling system ensures a clear overview of your wine collection. Alternatively, you can display your wines on the high-quality presentation shelf.

The HW 8000 can be fully integrated to match your unique design, matching cabinetry heights of up to 80" or 84", including Side-by-Side combinations for maximum wine storage. A stainless steel panel accessory kit is available for when your design calls for a stainless steel look.

The HW 8000's activated charcoal filter provides superb air quality by removing contaminating substances from the cabinet air. The insulated glass door with UV protection and LED lighting, alongside the activated charcoal filter, protect your finest wines from busy kitchen influences such as light and damaging odors.

HW 8000 Vinidor

LED | Wine | Soft System | Telescopic Rails | ADA Compliant

Capacity	
Total capacity cu.ft. (l)	9.0 (254)
Wine comp. cu.ft. (l)	9.0 (254)
Max. No. of Bordeaux btls 0.75 l	80
Temperature range °F (°C)	+41 to +68 (+5 to +20)
Net weight lbs. (kg)	200.6 (91.0)
Climate rating	SN-ST
Sound rating dB(A)*	36
Door hinges	right, reversible
Product dimensions	
in inch H/W/D	69 11/16"/21 15/16"/21 13/16"
in cm H/W/D	177/55.7/55.3
Cut out dimensions (Cut out height does not include toe kick)	
in inch H/W/D	69 13/16"-70 1/8"/22 1/16"-22 1/2"/21 11/16"
in cm H/W/D	177.2-178/56-57/55
Energy supply	
Voltage V/Hz	115/60
This unit is also available as	
HWgb 8300: in elegant black (fits 83 bottles)	
HWgw 8300: in chic white (fits 83 bottles)	
Ventilation Requirements for installation per unit	200 cm²/31 in²

Available accessories (from page 104)
4.1, 5.1, 7.14, 8.1, 8.2, 8.5, 9.1

* Noise level – sound power re 1pW – according to EN 60704-3.

reddot award 2018 winner

Wine Cabinets

24"

The TipOpen, white glass **HWgw 5100** multi-temperature wine cabinet is sure to compliment any kitchen, bar, or living room design. The temperature in each of the two sophisticated temperature zones can be set between 41°F and 68°F, ensuring optimal storage conditions for reds, whites, and champagnes. The HWgw 5100 provides storage flexibility for up to 51 Bordeaux bottles thanks to its beech wood shelving and six storage areas at varying heights, ideal for grouping different bottles types and sizes. A flexible clip-on labelling system ensures a clear overview of your wine collection. Alternatively, you can display your wines on the high-quality foldable presentation shelf.

The HWgw 5100's chic white glass door, featuring TipOpen technology, offers seamless integration into handle-free kitchen cabinetry. When the glass door is gently tapped, TipOpen technology partially opens the cabinet, facilitating further opening. If the door is not fully opened within three seconds, the door will self-close, ensuring that ideal air humidity is maintained within cabinet. This wine cabinet can be installed in a Side-by-Side combination for maximum wine storage.

The HWgw 5100's activated charcoal filter provides superb air quality by removing contaminating substances from the cabinet air. The insulated glass door with UV protection and LED lighting, alongside the activated charcoal filter, protect your finest wines from busy kitchen influences such as light and damaging odors.

HWgw 5100 Vinidor

LED | Wine | Tip Open | Soft System | Telescopic Rails | ADA Compliant

Capacity	
Total capacity cu.ft. (l)	6.0 (169)
Wine comp. cu.ft. (l)	6.0 (169)
Max. No. of Bordeaux btls 0.75 l	51
Temperature range °F (°C)	+41 to +68 (+5 to +20)
Net weight lbs. (kg)	152.1 (69.0)
Climate rating	SN-ST
Sound rating dB(A)*	36
Door hinges	right, reversible
Product dimensions	
in inch H/W/D	48"/21 15/16"/22 9/16"
in cm H/W/D	121.8/55.7/57.2
Cut out dimensions (Cut out height does not include toe kick)	
in inch H/W/D	48 1/16"-48 11/16"/22 1/16"-22 1/2"/21 11/16"
in cm H/W/D	122-123.6/56-57/55
Energy supply	
Voltage V/Hz	115/60
This unit is also available as	
HW 4800: panel ready (fits 48 bottles)	
HWgb 5100: in elegant black (fits 51 bottles)	
Ventilation Requirements for installation per unit	200 cm²/31 in²

Available accessories (from page 104)

4.1, 7.14, 9.1

* Noise level – sound power re 1pW – according to EN 60704-3.

Wine Cabinets

24"

The fully integrated **HW 3000** multi-temperature wine cabinet is sure to compliment any kitchen, bar, or living room design. The temperature in each of the two sophisticated temperature zones can be set between 41°F and 68°F, ensuring optimal storage conditions for reds, whites, and champagnes. The HW 3000 provides storage flexibility for up to 30 Bordeaux bottles thanks to its beech wood shelving and four storage areas at varying heights, ideal for grouping different bottles types and sizes. A flexible clip-on labelling system ensures a clear overview of your wine collection. Alternatively, you can display your wines on the high-quality presentation shelf.

The HW 3000 can be fully integrated to match your unique design, including Side-by-Side combinations for maximum wine storage. A stainless steel panel accessory kit is available for when your design calls for a stainless steel look.

The HW 3000's activated charcoal filter provides superb air quality by removing contaminating substances from the cabinet air. The insulated glass door with UV protection and LED lighting, alongside the activated charcoal filter, protect your finest wines from busy kitchen influences such as light and damaging odors.

HW 3000 Vinidor

LED | Wine | Soft System | Telescopic Rails | ADA Compliant

Capacity	
Total capacity cu.ft. (l)	3.4 (97)
Wine comp. cu.ft. (l)	3.4 (97)
Max. No. of Bordeaux btls 0.75 l	30
Temperature range °F (°C)	+41 to +68 (+5 to +20)
Net weight lbs. (kg)	114.6 (52.0)
Climate rating	SN-ST
Sound rating dB(A)*	36
Door hinges	right, reversible
Product dimensions	
in inch H/W/D	34 11/16"/22 1/16"/21 11/16"
in cm H/W/D	88/56/55
Cut out dimensions (Cut out height does not include toe kick)	
in inch H/W/D	34 7/16"-35 1/16"/22 1/16"-22 1/2"/21 11/16"
in cm H/W/D	87.4-89/56-57/55
Energy supply	
Voltage V/Hz	115/60
This unit is also available as	
HWgb 3300: in elegant black (fits 33 bottles)	
HWgw 3300: in chic white (fits 33 bottles)	
Ventilation Requirements for installation per unit	200 cm²/31 in²

Available accessories (from page 104)
4.1, 5.1, 7.14, 8.1, 8.2, 8.5, 9.1

* Noise level – sound power re 1pW – according to EN 60704-3.

Wine Cabinets

24"

The innovative and superbly designed **HWgb 1803** wine cabinet is designed for today's modern kitchen. Featuring high performance technology alongside easy-to-use features, the HWgb 1803 proves that it's possible to save energy without compromising convenience and design. Employing state-of-the-art climate technology with heating and cooling circuits, alongside FreshAir activated filtration, the HWgb 1803 ensures the very best conditions for wines to quietly mature and develop their full flavor. Precision electronics, specialized compressors, and a variety of additional innovative features, make the HWgb 1803 the ideal model for optimally storing wine.

The HWgb 1803 includes TipOpen technology – the perfect solution for hands-free kitchen designs. When the glass door is gently tapped, TipOpen technology partially opens the cabinet, facilitating further opening. If the door is not fully opened within three seconds, the door will self-close, ensuring that ideal air humidity is maintained within cabinet. When fully opened, the door opens downward like an oven.

The easy-glide accessory drawer can be used to store wine accessories directly below the HWgb 1803.

HWgb 1803 GrandCru

LED | Wine | Tip Open | Soft System | Telescopic Rails | ADA Compliant

Capacity	
Total capacity cu.ft. (l)	1.6 (46)
Wine comp. cu.ft. (l)	1.6 (46)
Max. No. of Bordeaux btls 0.75 l	18
Temperature range °F (°C)	+41 to +68 (+5 to +20)
Net weight lbs. (kg)	75.0 (34.0)
Climate rating	SN-ST
Sound rating dB(A)*	36
Door hinges	drop-down door with TipOpen technology
Product dimensions	
in inch H/W/D	17 11/16"/21 7/8"/22 1/16"
in cm H/W/D	44.8/55.5/55.9
Cut out dimensions	
in inch H/W/D	17 3/4"-17 13/16"/22 1/16"-22 1/2"/21 11/16"
in cm H/W/D	45-45.2/56-57/55
Energy supply	
Voltage V/Hz	115/60

Available accessories (from page 104)
3.3, 4.1

* Noise level – sound power re 1pW – according to EN 60704-3.

Wine Cabinets

24"

The **HWS 1800** fully integrated wine cabinet holds up to 18 Bordeaux bottles in an ideal storage environment. The innovative styling allows the cabinet to sit flush with cabinetry, while its recessed handle allows for simple lines that incorporates beautifully into your custom kitchen design. The HWS 1800 can fit anywhere in your home, allowing for your finest wine collections to be displayed at eye level.

The temperature of the cabinet can be set between 41°F and 68°F, making the HWS 1800 suitable for storing reds, whites, and champagne. The insulated glass door with UV protection, alongside the activated charcoal filter, protect the wines from busy kitchen influences such as light and odor. The energy efficient LED ceiling light not only emits virtually no heat, but it is dimmable to cast a cool glow across the room. A trim kit with stainless steel panels for 30" wide cabinet installations is available as an accessory.

HWS 1800 GrandCru

LED | Wine | Telescopic Rails | ADA Compliant

Capacity	
Total capacity cu.ft. (l)	1.7 (47)
Wine comp. cu.ft. (l)	1.7 (47)
Max. No. of Bordeaux btls 0.75 l	18
Temperature range °F (°C)	+41 to +68 (+5 to +20)
Net weight lbs. (kg)	66.1 (30.0)
Climate rating	SN
Sound rating dB(A)*	36
Door hinges	right, reversible
Product dimensions	
in inch H/W/D	17 3/8" / 21 15/16" / 20 9/16"
in cm H/W/D	44.1 / 55.7 / 52.2
Cut out dimensions	
in inch H/W/D	17 3/4" / 22 1/16" / 21 11/16"
in cm H/W/D	45 / 56 / 55
Energy supply	
Voltage V/Hz	115 / 60

Available accessories (from page 104)
3.2, 4.1, 7.13

* Noise level – sound power re 1pW – according to EN 60704-3.

Wine Cabinets

24"

The **WUgb 3400** offers a number of innovative solutions for wine storage. The temperature in each of the two sophisticated temperature zones can be set between 41°F and 68°F, ensuring optimal storage conditions for reds, whites, and champagnes.

The elegant black glass door, featuring TipOpen technology, offers seamless integration into handle-free kitchen cabinetry. This smart wine cabinet can hold up to 34 Bordeaux bottles and when lightly tapped, the glass door partially opens, facilitating further opening. If the door is not fully opened further within three seconds, the door will self-close, safeguarding your precious wines.

Liebherr's design uses recirculated forced air cooling and a permanent fresh air supply via an easily exchangeable activated charcoal filter. Humidity ranges between 50 and 80 percent, permitting wine to breathe as it matures and to keep corks supple. Specially developed, quiet compressors ensure that the WUgb 3400 produces the lowest vibration possible as fine wines love peace and quiet as much as anyone.

WUgb 3400 Vinidor

LED | Wine | Tip Open | Soft System | Telescopic Rails | ADA Compliant

Capacity	
Total capacity cu.ft. (l)	3.3 (94)
Wine comp. cu.ft. (l)	3.3 (94)
Max. No. of Bordeaux btls 0.75 l	34
Temperature range °F (°C)	+41 to +68 (+5 to +20)
Net weight lbs. (kg)	108.0 (49.0)
Climate rating	SN-ST
Sound rating dB(A)*	38
Door hinges	right, reversible
Product dimensions	
in inch H/W/D	32 1/4"/23 9/16"/22 3/4"
in cm H/W/D	81.8/59.7/57.7
Cut out dimensions	
in inch H/W/D	32 5/16"-34 5/16"/23 5/8"/22 7/8"
in cm H/W/D	82-87/60/58
Energy supply	
Voltage V/Hz	115/60

Available accessories (from page 104)
4.1, 7.2, 7.5, 7.6, 7.7, 9.1

* Noise level – sound power re 1pW – according to EN 60704-3.

24"

Wine Cabinets

Temperature, humidity, vibration, and light are the most important elements of wine storage. Liebherr's **WU 3400**, with dual temperature zones, addresses all four of these areas with the best storage and preservation needs in mind. The temperature in each of the two sophisticated temperature zones can be set between 41°F and 68°F, making the cabinet suitable for storing reds, whites, and champagnes.

As a true wine storage unit, the WU 3400 includes heating capabilities to maintain accurate temperatures when the location of the appliance is colder than the desired set temperature. Temperatures will not drop below 32°F thanks to the safety thermostat, ensuring the best quality of your wines. In addition to the constant temperature feature, ideal climates are created with alongside exceptional air quality. Liebherr's design uses recirculated forced air cooling and a permanent fresh air supply via an easily exchangeable activated charcoal filter.

Humidity ranges between 50 and 80 percent, permitting wine to breathe as it matures and to keep corks supple. Specially developed, quiet compressors ensure that the cabinet produces the lowest vibration possible as fine wines love peace and quiet as much as anyone. The WU 3400 is available in stainless steel or can be designed with a custom panel using the overlay accessory kit.

WU 3400 Vinidor

LED | Wine | Telescopic Rails | ADA Compliant

Capacity	
Total capacity cu.ft. (l)	3.3 (94)
Wine comp. cu.ft. (l)	3.3 (94)
Max. No. of Bordeaux btls 0.75 l	34
Temperature range °F (°C)	+41 to +68 (+5 to +20)
Net weight lbs. (kg)	108.0 (49.0)
Climate rating	SN-ST
Sound rating dB(A)*	39
Door hinges	right, reversible
Product dimensions	
in inch H/W/D	32 1/4"/23 9/16"/22 3/4"
in cm H/W/D	81.8/59.7/57.5
Cut out dimensions	
in inch H/W/D	32 5/16"-34 5/16"/23 5/8"/22 7/8"
in cm H/W/D	82-87/60/58
Energy supply	
Voltage V/Hz	115/60

Available accessories (from page 104)
4.1, 5.2, 7.2, 7.5, 7.6, 7.8, 9.1

*Noise level – sound power re 1pW – according to EN 60704-3.

24"

Wine Cabinets

The **WU 4500** wine storage cabinet is ideal for storing wines for long periods of time, allowing them to mature to perfection. The temperature of the cabinet can be set between 41°F and 68°F, making the cabinet suitable for storing reds, whites, and champagnes.

The WU 4500 can hold up to 46 Bordeaux bottles, stored on beech wood shelves with smooth telescopic rails. With a constant supply of fresh air via an activated charcoal filter and continuously circulating air cooling, this appliance guarantees consistent high air quality during the maturing process. A specially developed compressor ensures that wines are stored in a vibration-free environment so as to not disturb the wines' sediment.

The WU 4500 can be integrated easily and elegantly into any custom kitchen design as it ventilates through the toe kick, eliminating the need for counter slots. This sophisticated appliance also boasts a digital temperature display conveniently located at the top of the cabinet with visibility through the elegant glass door.

WU 4500 GrandCru

LED | Wine | Telescopic Rails | ADA Compliant

Capacity	
Total capacity cu.ft. (l)	3.9 (110)
Wine comp. cu.ft. (l)	3.9 (110)
Max. No. of Bordeaux btls 0.75 l	46
Temperature range °F (°C)	+41 to +68 (+5 to +20)
Net weight lbs. (kg)	99.2 (45.0)
Climate rating	SN-ST
Sound rating dB(A)*	39
Door hinges	right, reversible
Product dimensions	
in inch H/W/D	32 1/4"/23 9/16"/22 3/4"
in cm H/W/D	81.8/59.7/57.7
Cut out dimensions	
in inch H/W/D	32 5/16"-34 5/16"/23 5/8"/22 7/8"
in cm H/W/D	82-87/60/58
Energy supply	
Voltage V/Hz	115/60

Available accessories (from page 104)
4.1, 5.2, 7.2, 7.5, 7.6, 7.8, 9.1

* Noise level – sound power re 1pW – according to EN 60704-3.

Wine Cabinets

28"

The **WS 17800** satisfies your need for the smartest, most elegant way to store wine, in addition to adding a sophisticated flair when entertaining your guests. While stylish enough to fit any decor, the WS 17800 also creates the ideal conditions for wines to mature successfully – constant air quality, temperature, and humidity controls, alongside quiet, vibration-free storage. Specially developed, quiet compressors ensure that the cabinet produces the lowest vibration possible, allowing wines to fully mature. The insulated glass door with UV protection, alongside the activated charcoal filter, protect the wines from busy kitchen influences such as light and odor.

The three temperature zones within the WS 17800 can be set between 41°F to 68°F, making the cabinet suitable for the storage of reds, whites, and champagnes. This model is equipped with an alarm system to alert the user if the door has been left open, or if the selected temperatures have been compromised. The energy efficient LED ceiling light not only emits virtually no heat, but it is dimmable to cast a cool glow across the room.

As a true wine storage unit, the WS 17800 includes heating capabilities to maintain accurate temperatures when the location of the cabinet is colder than the desired set temperature. Liebherr's design uses recirculated forced air cooling and a permanent fresh air supply via an easily exchangeable activated charcoal filter. Humidity ranges between 50 and 80 percent, permitting wine to breathe as it matures and to keep corks supple. Attractive beech wood shelving with smooth telescopic rails, and a unique drop-down presentation shelf, makes displaying your finest wines elegant and easy.

WS 17800 Vinidor

LED | Wine | Soft System | Telescopic Rails

Capacity	
Total capacity cu.ft. (l)	17.8 (505)
Wine comp. cu.ft. (l)	17.8 (505)
Max. No. of Bordeaux btls 0.75 l	178
Temperature range °F (°C)	+41 to +68 (+5 to +20)
Net weight lbs. (kg)	308.6 (140.0)
Climate rating	SN-ST
Sound rating dB(A)*	39
Door hinges	right, reversible
Product dimensions	
in inch H/W/D	75 5/8"/27 9/16"/29 1/4"
in cm H/W/D	192/70/74.2
Cut out dimensions	
in inch H/W/D	77 9/16"/28"/27 1/16"
in cm H/W/D	197/71.1/68.6
Energy supply	
Voltage V/Hz	115/60
Ventilation Requirements for installation per unit	300 cm² /46.5 in²

Available accessories (from page 104)
3.1, 4.1

* Noise level – sound power re 1pW – according to EN 60704-3.

WS 1200 I XS 200

Key Benefits – Design & Lifestyle Appliances

LED lighting: Liebherr's humidor has LED lighting with dimmer function incorporated in the glass door. As the LEDs emit virtually no heat, the cigars can be exposed to the light for long periods of time without damage.

LED lighting: For ideal presentation of your best wine, the WS 1200 features LED lighting with dimmer function and separate switch. As the LEDs emit minimal heat and no UV radiation, wine can be showcased bathed in light for lengthy periods without compromosing its quality.

Fine cedar wood: Our XS 200 humidor features two presentation boxes and two wooden shelves crafted from Spanish cedar wood. The presentation boxes are perfect for storing loose cigars.

Wall mount option: Both the WS 1200 wine cabinet and XS 200 humidor can be wall-mounted as an attractive eye-catcher with convenient access for serving.

Ideal humidity: The integrated water tray can accommodate 34 oz of distilled water for ideal humidity. Sensors regulate precise humidity level selected. The display informs when water needs to be replenished.

Touch electronic control system: The perfect wine storage temperature is +46 °F to +54 °F. White wine should ideally be stored below +50 °F and red wine at up to +64 °F. Our electronic control system allows temperature to be set to the exact degree required between +41 °F to +68 °F.

Features shown are model dependent. Product features may vary.

Design & Lifestyle

17"

Liebherr's **WS 1200** offers premium wine storage in an attractive package to fit within any setting. This tabletop wine cabinet holds up to 12 Bordeaux bottles on solid beech wood shelving, and includes a drawer to store wine accessories, chocolates, or candies.

The temperature of the cabinet can be set between 41 °F and 68 °F, making the WS 1200 suitable for storing reds, whites, and champagnes. Energy efficient LED lighting can be controlled with a dimming function creating the perfect atmosphere without affecting the temperature of the wines.

WS 1200 GrandCru

LED | Wine | Smart Steel

Capacity	
Total capacity cu.ft. (l)	1.3 (38)
Max. No. of Bordeaux btls 0.75 l	12
Temperature range °F (°C)	+41 to +68 (+5 to +20)
Net weight lbs. (kg)	66.1 (30.0)
Climate rating	SN
Sound rating dB(A)*	41
Door hinges	right
Product dimensions	
in inch H/W/D	24 1/8"/16 3/4"/18 7/8"
in cm H/W/D	61.2/42.5/47.8
Cut out dimensions	
in inch H/W/D	26"/17"/19"
in cm H/W/D	66/43.1/48.2
Energy supply	
Voltage V/Hz	115/60

Available accessories (from page 104)
4.1

* Noise level – sound power re 1pW – according to EN 60704-3.

Design & Lifestyle

17"

The **XS 200** humidor creates the perfect environment for your finest cigars with the proper balance of humidity and temperature. Humidity can be set from 68 to 75 percent, where moisture is supplied from a removable distilled water container. The storage cabinet can be set from 61 °F to 68 °F, depending on the owner's preference. This humidor includes LED lighting with dimmer function, emitting virtually no heat, meaning cigars can be exposed to light for long periods of time without damage.

The XS 200's two presentation boxes and shelves are crafted from Spanish cedar wood, and vary in height for additional storage options. The wooden presentation boxes are perfect for storing loose cigars, and can be easily removed for presentation to your guests.

XS 200 Humidor

LED | Cigar | Smart Steel

Capacity	
Total capacity cu.ft. (l)	1.4 (39)
Temperature range °F (°C)	+61 to +68 (+16 to +20)
Net weight lbs. (kg)	68.3 (31.0)
Climate rating	N
Sound rating dB(A)*	42
Door hinges	right
Product dimensions	
in inch H/W/D	24 1/8"/16 3/4"/18 7/8"
in cm H/W/D	61.2/42.5/47.8
Cut out dimensions	
in inch H/W/D	26"/17"/19"
in cm H/W/D	66/43.1/48.2
Energy supply	
Voltage V/Hz	115/60

Available accessories (from page 104)
4.1

* Noise level – sound power re 1pW – according to EN 60704-3.

Accessories

01 Bottle Racks

1.1	Bottle rack	CS 1210, CS 1360B, CS 1321	7113 023
		CBS 1360	7112 448
		CS 1400R, CS 1400R-IM, CS 1401R-IM, CS 1410, CS 1640B	7113 257
		CBS 1660, CBS 1661	7112 325

02 Dividers

2.1	Freezer divider for either drawer	HCB 1580, HCB 1581	9033 012
		CS 2080, CS 2081, CS 2082, CBS 2082, HC 2080, HC 2081, HCB 2080, HCB 2081, HC 2082, HCB 2082	9033 016
2.2	Solid divider for 1st drawer only	HCB 1580, HCB 1581	9033 018
		CS 2080, CS 2081, CS 2082, CBS 2082, HC 2080, HC 2081, HCB 2080, HCB 2081, HC 2082, HCB 2082	9033 014

03 Drawers

3.1	Accessory drawer/bottle storage	WS 17800	9033 373
3.2	Accessory drawer stainless steel	HWS 1800	9901 084
3.3	Accessory drawer black glass	HWgb 1803	9901 085

04 Filters

4.1	Charcoal filter	WU 3400, WUgb 3400, WU 4500, HW 8000, HWgb 8300, HWgw 8300, HW 4800, HWgb 5100, HWgw 5100, HW 3000, HWgb 3300, HWgw 3300, HWgb 1803	7434 557
		HWS 1800, WS 17800	7433 243
		WS 1200, XS 200	7440 699
4.2	Water filter	CS 1360B, CBS 1360, CS 1400R-IM, CS 1401R-IM, CBS 1660, CBS 1661, CS 2080, CS 2081, CS 2082, CBS 2082, HF 861, HC 1550, HC 1551, HCB 1580, HCB 1581, HC 2080, HC 2081, HCB 2080, HCB 2081, HC 2082, HCB 2082	7440 002
4.3	Add on water filter kit	CS 1360B, CBS 1360, CS 1400R-IM, CS 1401R-IM, CBS 1660, CBS 1661	9096 034

05 Handles

5.1	Brushed aluminum square handle	HC 1550, HC 1551, HC 1540, HC 1541, HCB 1580, HCB 1581	9900 281
		HC 2080, HC 2081, HCB 2080, HCB 2081	9900 329
		HC 2082, HCB 2082	9900 513
		HW 8000, HW 4800, HW 3000, UPR 513, UR 500, UB 501, UF 501	9901 561
5.2	Stainless steel round handle	RO 510, RU 510, WU 3400, WU 4500	9901 071
5.3	Stainless steel round handles	HC 1550, HC 1551, HC 1540, HC 1541, HCB 1580, HCB 1581	9900 279
		HC 2080, HC 2081, HCB 2080, HCB 2081	9900 327
		HC 2082, HCB 2082	9900 339
5.4	Stainless steel round handle 14"	UPR 513, UR 500, UB 501, UF 501	9901 527
5.5	Square handle kit	CS 1210, CS 1360B, CS 1321, CBS 1360, CS 1400R, CS 1400R-IM, CS 1401R-IM, CS 1410, CS 1640B, CBS 1660, CBS 1661	9901 557

06 Ice Bucket

6.1	Ice bucket	CS 2080, CS 2081, CS 2082, CBS 2082, HCB 1580, HCB 1581, HC 2080, HC 2081, HCB 2080, HCB 2081, HC 2082, HCB 2082	9901 932

Accessories

07 Installation Kits

7.1	Adjustable toe kick	UPR 513, UR 500, UB 501, UF 501	9900 436
7.2	Custom panel overlay kit	RU 510, WU 3400, WUgb 3400, WU 4500	9590 131
7.3	Door reversal kit	HC 1550, HC 1551, HC 1540, HC 1541, HCB 1580, HCB 1581	9900 167
		HC 2080, HC 2081, HCB 2080, HCB 2081	9900 165
7.4	Door stopper 90°	HC 1030, HC 1050B, HCB 1060, HRB 1120, HF 861	9096 214
		HC 1550, HC 1551, HC 1540, HC 1541, HCB 1580, HCB 1581, HC 2080, HC 2081, HCB 2080, HCB 2081	9096 699
		CS 1321, CBS 1360, CS 1400R, CS 1400R-IM, CS 1401R-IM, CS 1640B, CBS 1660, CBS 1661	9096 683
7.5	Side-by-Side kit	CS 1210, CS 1360B, CS 1321, CBS 1360, CS 1400R, CS 1400R-IM, CS 1401R-IM, CS 1410, CS 1640B, CBS 1660, CBS 1661	9901 555
		CS 2080, CS 2081	9900 221
		HC 1550, HC 1551, HC 1540, HC 1541, HCB 1580, HCB 1581	9900 219
		HC 2080, HC 2081, HCB 2080, HCB 2081	9900 183
		RU 510, WU 3400, WUgb 3400, WU 4500	9902 272
7.6	Top filler angle bracket	RU 510, WU 3400, WUgb 3400, WU 4500	9902 240
7.7	Top filler – black glass	WUgb 3400	9901 599
7.8	Top filler – stainless steel	RU 510, WU 3400, WU 4500	9901 601
7.9	Top grill for 67" to 72", Side-by-Side	CS 1400R, CS 1400R-IM, CS 1401R-IM	9901 521
7.10	Top grill for 67" to 72", single unit	CS 1400R, CS 1400R-IM, CS 1401R-IM	9901 523
7.11	Top ventilation grill 84" cabinets, single unit	CS 2080, CS 2081	9900 277
		CS 2082, CBS 2082	9900 199
7.12	Top ventilation grill 84" cabinets, 48" Side-by-Side	CS 1321, CBS 1360	9900 368
7.13	Trim kit 30"	HWS 1800	9900 073
7.14	Ventilation grill (pantries)	HW 8000, HWgb 8300, HWgw 8300, HW 4800, HWgb 5100, HWgw 5100, HW 3000, HWgb 3300, HWgw 3300	7427 640

08 Panels & Frames

8.1	Brushed aluminum profile frame 3/4"	HW 8000	9901 080
		HW 4800	9901 079
		HW 3000	9901 075
8.2	Brushed aluminum profile frame 7/8"	HW 8000	9901 083
		HW 4800	9901 082
		HW 3000	9901 081
8.3	Stainless steel panel	UPR 513, UR 500, UB 501, UF 501	9900 432
8.4	Stainless steel panel with handle	HRB 1120, HF 861	9902 007
8.5	Stainless steel panel, profile frame and handle	HW 8000	9901 573
		HW 4800	9901 575
		HW 3000	9901 577
8.6	Stainless steel panels freezers	HC 1550, HC 1551, HC 1540, HC 1541, HCB 1580, HCB 1581	9900 283
		HC 2080, HC 2081, HCB 2080, HCB 2081, HC 2082, HCB 2082	9900 323
8.7	Stainless steel panels refrigerator 80"	HC 1550, HC 1551, HC 1540, HC 1541, HCB 1580, HCB 1581	9900 287
		HC 2080, HC 2081, HCB 2080, HCB 2081	9900 333
		HC 2082, HCB 2082	9900 337
8.8	Stainless steel panels refrigerator 84"	HC 1550, HC 1551, HC 1540, HC 1541, HCB 1580, HCB 1581	9900 285
		HC 2080, HC 2081, HCB 2080, HCB 2081	9900 331
		HC 2082, HCB 2082	9900 335

09 Wine Labels

9.1	Plastic clip labels (2 pcs)	WU 3400, WUgb 3400, WU 4500, HW 8000, HWgb 8300, HWgw 8300, HW 4800, HWgb 5100, HWgw 5100, HW 3000, HWgb 3300, HWgw 3300	9094 397

Click the link to directly access
our social media channels:
socialmedia.home.liebherr.com

Liebherr USA, Co.
Refrigerators & Freezers Division

Subject to modification. For up-to-date information, visit home.liebherr.com. Printed in Canada 2019.